Department of Health
and the Welsh Office

MC0012

Health Technical Memorandum

Building components

Internal doorsets

58

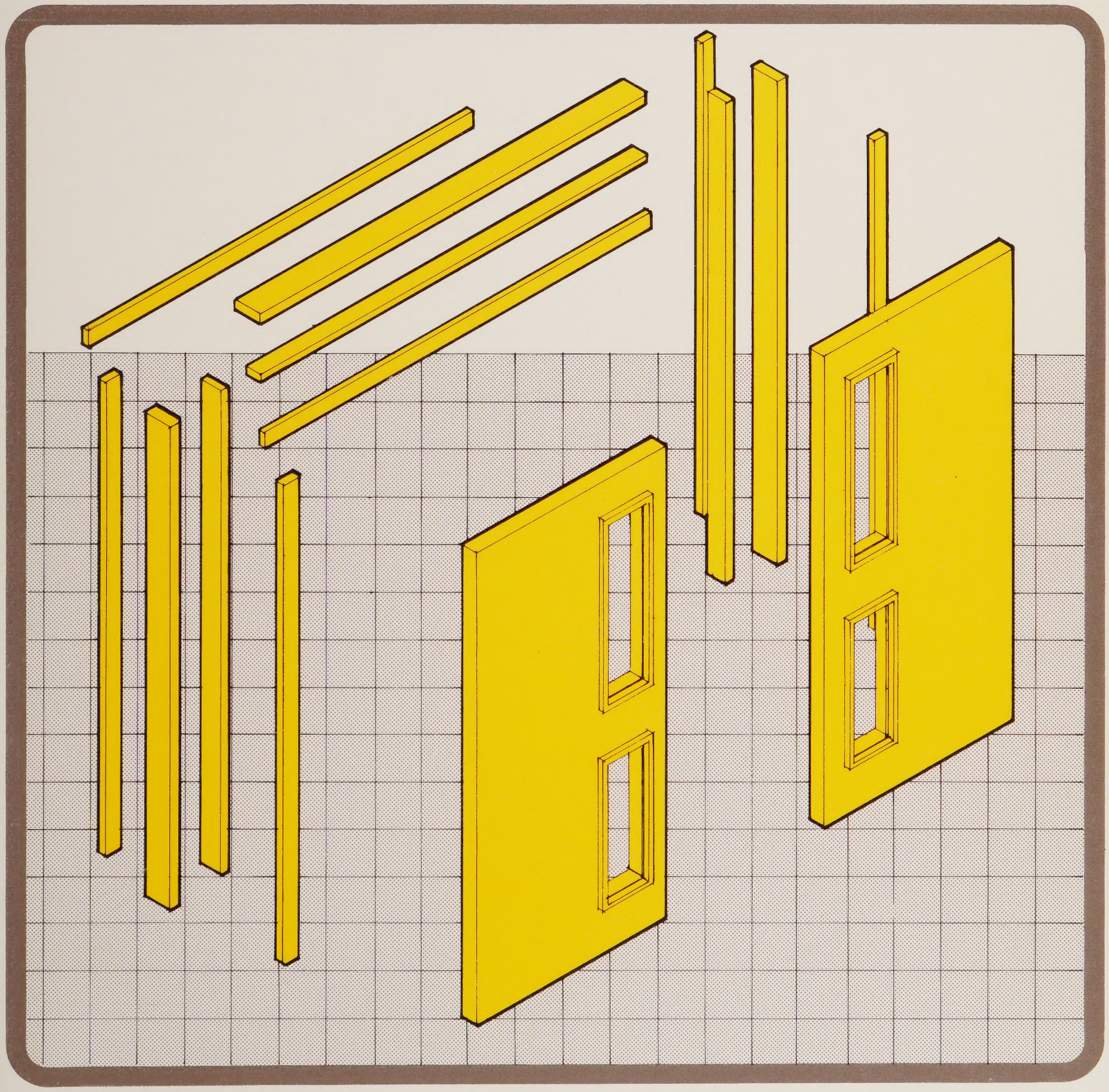

Digitized by the Internet Archive
in 2025 with funding from
UCL Library Special Collections

https://archive.org/details/ucl_mc0012

Department of Health
and the Welsh Office

Health Technical Memorandum

Building components

Internal doorsets

58

London:
Her Majesty's Stationery Office

©Crown copyright 1989
First published 1989
ISBN 0 11 321260 7

Contents

1 Introduction

1.1 Background
1.2 Scope and status
1.3 Relationship to other data
1.4 Terminology

2 Design and specification guidance

2.1 General
2.2 Dimensions
2.2.1 General
2.2.2 Height
2.2.3 Width
2.2.4 Thickness
2.3 Description
2.3.1 Grades of doorset
2.3.2 Configuration
2.3.3 Handing
2.3.4 Constituent parts
2.3.5 Door leaves
2.3.6 Door frames
2.3.7 Thresholds
2.3.8 Screw fixings
2.4 Glazing
2.5 Surface treatment and finishes
2.6 Special features
2.6.1 Buffer strips
2.6.2 Air transfer grilles
2.7 Ironmongery
2.8 Fire precautions
2.8.1 Fire-resisting doorsets
2.8.2 Smoke containment
2.9 Sound insulation
2.10 Hygrothermal performance
2.11 X-ray protection
2.12 Evaluation and certification

3 Design application
3.1 Partition and frame thickness
3.2 Layout and planning
3.3 Emergency access to patients

4 Project documentation
4.1 Drawings and schedules
4.2 Specification
4.3 Bills of quantities
4.4 Methods of procurement

5 Site practice
5.1 Programme
5.2 Delivery, handling and storage
5.3 Preparatory site work
5.4 Installation
5.5 Typical fixing detail
5.6 Quality control and testing

6 Maintenance

Appendices
A Design details
B Schedules and codes
C Specification
D Methods of test

References

1 Introduction

1.1 Background

This is one of a series of *Health Technical Memoranda* which provide specification and design guidance on building components for health buildings which are not adequately covered by current British Standards.

The series supersedes all Component Data Base Mark 3 (and earlier Manufacturers Data Base) information.

The numbers and titles of the HTM in the series are:

54 User Manual
55 Windows
56 Partitions
57 Internal glazing
58 Internal doorsets
59 Ironmongery
60 Ceilings
61 Flooring
62 Demountable storage system
63 Fitted storage system
64 Sanitary assemblies
65 Signs
66 Cubicle curtain track
67 Laboratory fitting out systems
68 Ducts and panel assemblies
69 Protection
70 Fixings

The technical information in this series is the result of research and development funded by the Department as part of collaborative working arrangements over a number of years between the Department, the NHS, and Industry through the medium of the Component Data Base.

Any enquiries regarding the technical content of this HTM should be directed to Health Building Directorate, Department of Health, Euston Tower, 286 Euston Road, London NW1 3DN.

1.2 Scope and status

This HTM offers guidance on the design and specification of a range of internal doorsets which will meet the general requirements of users and conditions of use in health buildings.

Its content does not diminish either manufacturer responsibility for fitness for purpose of products, or design team responsibility for selection and application of products to meet project requirements.

Although the guidance in this HTM is presented in the context of doorsets, ie a factory assembly of door leaf (or leaves), frame, and supporting ironmongery, delivered to site as a complete unit; much of it applies equally to door assemblies, ie door leaf (or leaves), frame, and ironmongery procured separately and assembled on site.

The range of doorsets presented in this HTM comprises medium duty, heavy duty, fire resisting and X-ray grades mainly of timber construction.

1.3 Relationship to other data

The main sources of data used in the preparation of this HTM are listed in the References section.

This HTM was prepared for printing in July 1985 and revised in July 1989 and is based on data current at that date. Readers should ensure that they use the latest edition of all building legislation, British Standards, etc., and give first preference to products and services from sources which have been Registered under BSI Quality Assurance procedures or equivalent procedures.

Suppliers offering products other than to British Standards should provide evidence to show that their products are at least equal to such standards.

The Health Building Division can provide manufacturing details for half hour and one hour fire resisting doorsets which have been successfully tested to BS 476 Parts 20 and 22.

1.4 Terminology

In this HTM the following terms apply. Others are defined in the sections in which they are used or in other documents listed in the References section.

Doorset – a factory assembly of door leaf (or leaves), frame, and supporting ironmongery delivered to site as a complete unit.

Door assembly – door leaf (or leaves), frame, and ironmongery, procured separately and assembled on site.

Fire-resisting doorset – a doorset of heavy duty grade which is fire resisting.

Plain door leaf – a door leaf without a vision panel.

Timber doorset – a doorset constructed of natural timber and/or timber based materials but including pvc and melamine facings.

Doorset configuration – the number of leaves and the manner in which they are hung, ie single or double leaf, single or double swing or sliding.

Dimensions

Width – the greater horizontal dimension of a doorset and the dimension across the face of a door leaf.

Height – any vertical dimension.

Thickness – the smallest dimension of a door leaf or partition or the lesser horizontal overall dimension of a doorset or frame.

These terms are illustrated below:

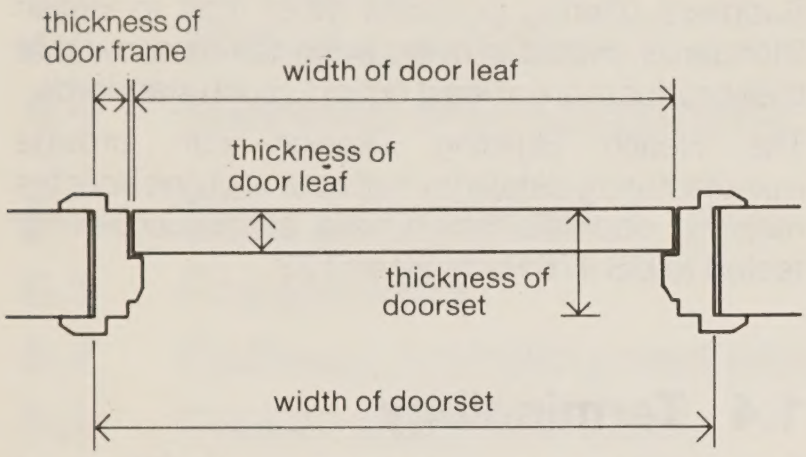

Basic space – a space bounded by reference planes assigned to receive a building component or assembly including allowance for joints and tolerances.

Co-ordinating size – the size given to a basic space.

Work size – a size of a doorset or opening to which its actual size should conform within specified permissible deviations.

These terms are illustrated below:

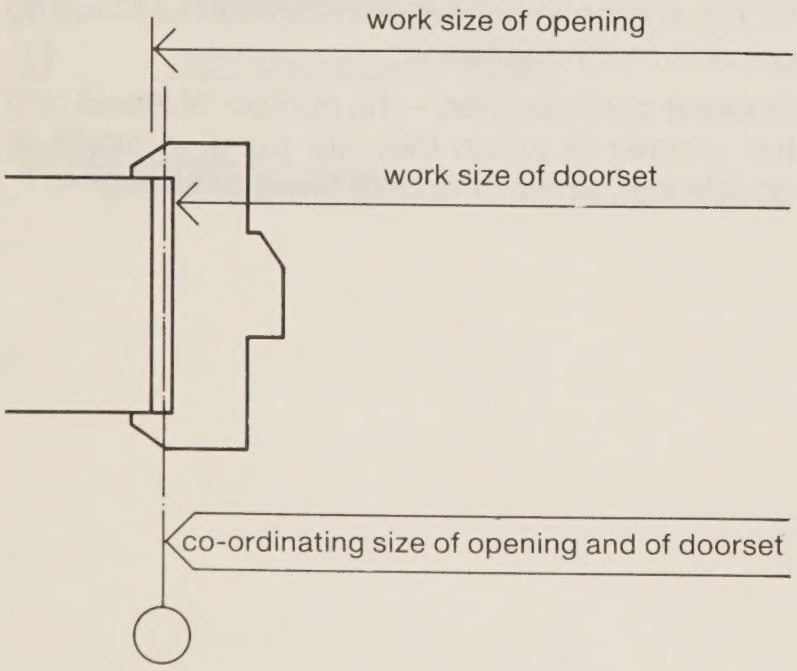

2 Design and specification guidance

2.1 General

All doorsets for health buildings should comply with the guidance and performance standards described in this HTM. The standards are based on extensive research and evaluation of doorsets in use and are the minimum required to ensure satisfactory performance.

Research has shown that the functional requirements for doorsets in health buildings can be met by a limited range of options and their selection should be based upon consideration of the following key characteristics:

- size
- configuration and handing
- grade
- glazing
- leaf finish
- frame finish
- special features, eg air transfer grilles

Doorsets

The high performance standards required of door leaves, frames and ironmongery in health buildings can best be met when these components are accurately fitted and matched in a factory and delivered to site as a complete unit.

Frames

Different frame constructions are available to suit any thickness of partition or wall and variations in frame width do not affect other key characteristics of a doorset.

Doorsets with a traditional one-piece frame are usually provided with loose architraves for fitting on site. Alternative designs use a split frame which includes integral architraves. Designers should notice the different plane of door leaf in these two alternatives. (See Appendix A for design details.)

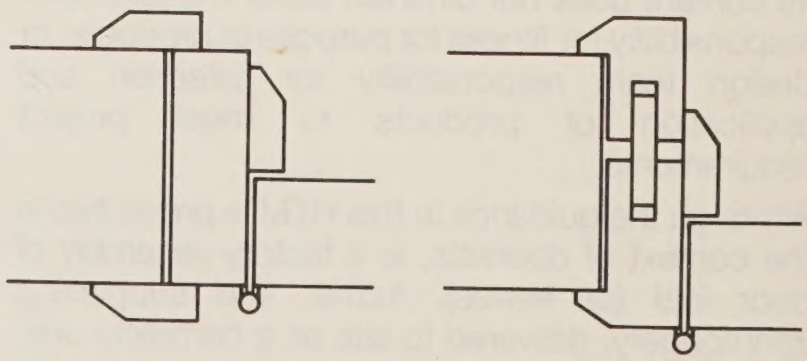

- one-piece frame
- split frame

2.2 Dimensions

2.2.1 General

Doorset sizes in this HTM are co-ordinating sizes of the basic spaces they will fill. Openings to receive doorsets should be specified with tolerances of:

- width –0 +10 mm
- height –0 + 5 mm

Work sizes of doorsets are subject to the permissible deviations stated in BS 4787: Part 1.

2.2.2 Height

All doorsets should have a co-ordinating height of 2100. Doorsets, without transomes or overpanels, meet most health building requirements, are economic and simplify the selection and fitting of ironmongery.

2.2.3 Width

Doorset widths should relate to functional requirements after allowing for the thickness of frame, stop, leaf thickness and projecting ironmongery when the leaf is in the open position. These allowances can reduce the clear opening width by 300 mm.

Width requirements can be specified broadly as follows:

Room/space	Co-ordinating width of doorset
Ducts, small cupboards	600
WCs, bathrooms, bedrooms, small offices	800
Larger offices, areas subject to frequent pedestrian movement, minimum width for wheelchairs	900
Areas subject to frequent movement of wheelchairs, trolleys and mobile equipment	1000
Minimum width for single bedrooms and assisted bathrooms	1300
Preferred width for assisted bathroom, single bedrooms and minimum for multi-bed areas	1500
Corridors, multi-bed areas and treatment areas	1700
Heavily trafficked corridors, preferred width for bed areas and treatment areas	1900

(See also HBN 37 for additional information about access for wheelchairs.)

2.2.4 Thickness

Doorsets should be capable of accommodating permissible deviations in partition or wall thickness of ±5 mm.

2.3 Description

2.3.1 Grades of doorset

There is an established need for the following grades of doorsets in health buildings.

- Medium duty
- Heavy duty
- Fire-resisting
- X-ray resisting

The grade of doorset should relate to functional requirements bearing in mind the distinction between a heavily used doorway and a heavily used door. Doors which are normally held open, for example, will be used only lightly however much traffic passes through the opening.

Sensible economies can be achieved by carefully matching the characteristics of doorsets to the demands placed upon them.

Examples of use for these grades are:

- Medium duty:
  Frequent use by people with some incentive to exercise care, eg doors in public areas used mainly by staff, occasionally with small trolleys or when carrying goods.
- Heavy duty:
  Very frequent use. Used by the general public and by people with little incentive to exercise care. Frequent passage of heavy trolleys, beds, or other bulky items.
- Fire-resisting:
  Used in designated positions to limit the spread of fire and to protect escape routes.
- X-ray resisting:
  Used to contain scatter from X-ray equipment.

In certain applications, such as residential accommodation, light duty grade may be appropriate but such doorsets are not dealt with in this HTM (refer to BS 4787 and DD171).

Severe duty grade doorsets may occasionally be required. These are described in DD171 as "subject to frequent violent abuse – doors of stockrooms, opened by driving trolleys against them etc."

2.3.2 Configuration

The decision as to whether to use single leaf, one and a half, or double leaf doorsets will be largely influenced by the size of opening required.

Leaves in excess of 900mm wide should be avoided if possible. They require a large floor area for opening and, being wide and heavy, exert maximum loading on hinges, closers and frame fixings.

2.3.3 Handing

The handing of a door describes the direction of its swing. The hand of a doorset is determined by the position of the hinge (or pivot) when viewed from the pull side of the door thus:

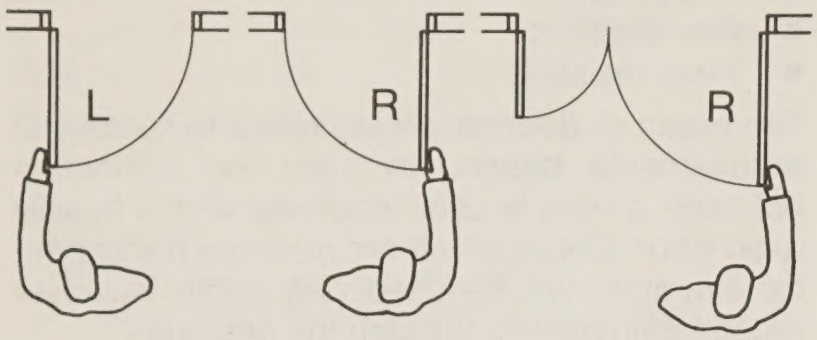

Left hand Right hand Right hand

The handing of one and a half leaf doorsets is determined by the larger leaf. Double doors with equal leaves and doors which swing two ways are symmetrical and are not handed.

The hand of the door will determine the hand of the ironmongery.

2.3.4 Constituent parts

Each doorset should consist of frame, leaf(s) and ironmongery. Frames should be robust, framed and jointed together, and prepared for two screw fixings at each of the positions in jambs and head shown in the illustration in 5.4.

Hinges or pivots are required with all doorsets and should be supplied as part of the doorset.

No constituent part should contain material which would be detrimental to the comfort or safety of users or which is known to give off appreciably toxic products during combustion.

2.3.5 Door leaves

Door leaves should be matched to their frame, be close fitting, and capable of receiving the full range of ironmongery required in health buildings. They should be set to their frame in such a way as to be readily demountable to facilitate site fitting and maintenance, and should comply with the shape and strength requirements set out in Appendix D.

The required levels of performance for doorsets can be met with leaves constructed of:

- medium duty:
  - softwood framing and rails
  - core of either –
    medium density particle board eg flaxboard, or proprietary particle board or proprietary honeycomb paper.
- heavy duty:
  either
  - solid laminated timber core, or
  - proprietary particle board core, or
  - medium density particle board core with softwood framing and rails.
- fire-resisting:
  as for heavy duty with additional proprietary features and with intumescent seals
- X-ray resisting:
  should incorporate appropriate lead shielding; see manufacturers' product data.

All leaves should incorporate solid members to accommodate the fixing of ironmongery.

They should be lipped on all edges with hardwood for the full thickness of the leaf to finish flush with the surface of the facing material. Lippings should be free from steel fastenings. Plastics faced leaves may alternatively be lipped with extruded plastics lippings.

2.3.6 Door frames

Frames constructed from most hardwoods to the details in Appendix A will meet the required levels of performance for all grades of doorset.

Frames constructed from softwood to the Appendix A details, will meet the required levels of performance for all but the one hour fire resisting grade.

All X-ray resisting doorset frames must incorporate the appropriate lead shielding.

2.3.7 Thresholds

Raised thresholds are not normally specified in health buildings as they tend to inhibit free movement of trolleys and to limit the use of floor cleaning machinery.

However on large doorsets, the incorporation of a permanent threshold ensures its overall shape by securing the feet of the frame and where the door is set on floor springs, allows them to be fitted at the joinery works. Such thresholds should be set flush with the floor screed and covered by the floor finish.

2.3.8 Screw fixings

All exposed screw fixings to frames should be pelleted with hardwood or plastic pellets.

2.3.9 Glazing beads

All glazing beads should have screw fixings and flush sockets, in one or both sides.

2.4 Glazing

The selection of glazing in doors should be based on considerations of observation and of safety, eg the need to avoid collision between users approaching the door from opposite sides, bearing in mind that users may be adults or children, ambulant or in wheelchairs, and in the case of staff, may be carrying objects or pushing or pulling mobile equipment. These needs can be met by the provision of vision panels or glazing as illustrated below and detailed in Appendix A.

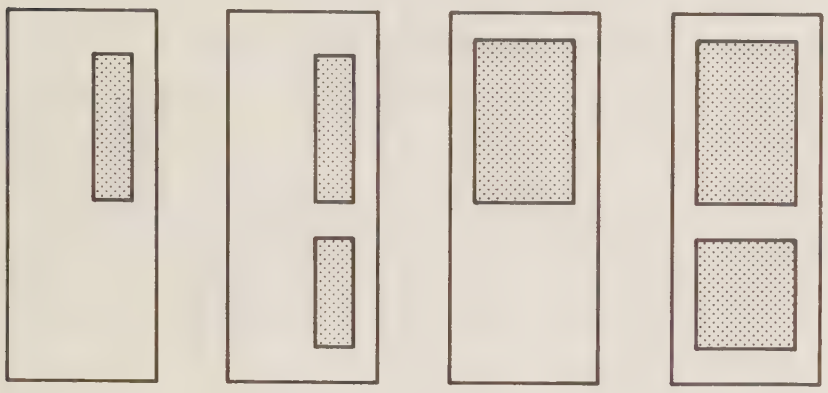

one vision panel | two vision panels | half glazed door | fully glazed door

A lower panel of glazing will considerably increase visibility which may be desirable in busy areas or where children are present.

The inclusion of a vision panel in fire-resisting doorsets is recommended as it will facilitate early warning and assessment of a fire.

Any vision panels in X-ray resisting doorsets should be restricted to the smallest practicable size because of the cost of providing the special glazing.

There is often a conflict of interests between the staff need for supervision and patient expectations of privacy. The provision of glazing in doors should be very carefully considered in this context. It may be suitable to fit curtains, or to use "venetian mirrored" glass and proprietary devices are available to allow controlled observation by staff.

Panels should be glazed in accordance with BS 6262 as follows:

- medium and heavy duty grades:
  6mm toughened or laminated safety glass
- fire-resisting grades:
  6mm georgian wired clear glass.

2.5 Surface treatment and finishes

Appearance

Door frames should have flat, true and smooth surfaces and all arrises should be slightly eased.

Door leaves should have smooth surfaces. Natural timber veneer facings should be made up from strips of veneer matched and laid with the longitudinal edges close butted to give hairline joints. There should be no cross joints between strips of veneer. Other facings should be cut from one sheet.

Components fabricated from like materials should be consistent in grain, colour or texture on all visible surfaces and throughout all the doorsets on any one project.

Preparation for finishing

Timber based door leaves for painting should be lightly sanded before priming. Priming should have a smooth surface free from application marks, eg brush, spray or roller, ready to receive following paint coats.

Abrasive papers and blocks, cleaning agents, etching solutions, mould inhibitors, rust inhibitors, size, stopping, knotting, fillers and other ancillary materials should be those recommended by their manufacturers and the decorative coating manufacturer for the surfaces being prepared.

Finishes

A wide range of surface finishes is available on timber based doorsets, including paint, stain, clear finish on wood veneer, pvc, and decorative melamine laminate. Doorsets are normally supplied complete with factory applied finishes although in the case of painted finishes only the priming coat is applied in the factory, the remaining paint coats being applied by others on site.

Finishes should be selected with full consideration of capital costs and subsequent maintenance costs.

Clear coated finishes may be difficult to maintain particularly in respect of scratching and minor impact damage where the coating has been penetrated.

Painted finishes are easier to maintain by filling scratches and minor impact damage and repainting.

Plastic laminate facings offer a high degree of resistance to surface scratching and impact damage, but tend to crack and chip when subjected to excessive impact. Such damage cannot be easily repaired.

High impact pvc facings offer a very high degree of resistance to impact damage, and because of their through colour, surface scratching is less noticeable. In the event of severe damage to the finish the affected areas can be cut out and replaced.

Finger plates, kicking plates and trolley plates should not normally be necessary with high impact pvc and plastic laminate facings.

A degree of protection to the edges of doors is provided by hardwood lipping but doors in heavily trafficked areas may well need extensive applied protection in order to minimize impact damage.

Resistance to marking

All surface finishes should be completed before ironmongery is fitted.

When tested in accordance with BS 3962, methods of test 2 to 6, the surface treatment of factory finished doorsets should have a resistance rating of not less than 3.

Cleaning and disinfection

All doorsets, including those with site applied finishes should be capable of withstanding:

- washing with hot water containing a mild non abrasive detergent as part of a regular cleaning programme
- disinfection by any of the disinfectants in general use in health buildings.

2.6 Special features

2.6.1 Buffer strips

Noise from the closing of doors can be a considerable nuisance in health buildings. This problem can be reduced by the inclusion of a continuous buffer strip to the frame. These are available in the form of self adhesive foam, V sections or P sections.

Buffer strips, by contributing to a snug fit between door and frame, will also contribute to fire resistance, smoke containment, sound insulation and sound deadening.

2.6.2 Air transfer grilles

Air transfer grilles in doorsets should be avoided wherever possible as they will materially affect the performance of the doorset in terms of sound insulation and impact resistance. They will also affect the fire resistance and smoke containment of doorsets and must not be used in fire- resisting doorsets.

If it is required to balance air pressure across a door opening alternative solutions should be adopted. For example, if the door is in frequent use or normally held open a grille will not be required, or a grille may be fitted into the partition near the door opening. Alternatively it may be sufficient to cut short the door leaf if sound insulation, fire resistance or smoke containment is not required.

2.7 Ironmongery

The correct selection and fitting of ironmongery are vital to the proper performance of a doorset and it is essential to consider ironmongery as an intrinsic part of each doorset from the earliest design stages. See HTM 59, Ironmongery.

Doorsets should be supplied as complete components with all ironmongery delivered to the doorset manufacturer and fitted at works. This involves different procurement procedures from those applicable to door assemblies, where ironmongery is fitted on site, but achieves a major improvement in performance and user satisfaction.

The transport of doorsets with projecting ironmongery may present difficulties of handling or storage. In such cases projecting ironmongery should be delivered loose with the doorset and fitted on site.

Cutting, morticing, drilling and routing on site are strongly deprecated.

2.8 Fire precautions

2.8.1 Fire-resisting doorsets

Fire-resisting doorsets in health buildings must meet the requirements of the Building Regulations and of DoH guidance specifically concerned with fire precautions (see HTM 81 'Fire safety in health buildings'). The most common requirement being for half hour and one hour grades.

Fire-resisting doorsets complete with ironmongery when tested in accordance with BS 476 Parts 20 and 22 must achieve the following performance (tests as Part 8 may be accepted until 1992):

	Designated Period	
	½ hour FR	1 hour FR
Integrity	30 minutes	60 minutes
Insulation	no requirement	no requirement

Tests for fire resistance should be carried out after all other specified tests have been completed.

Fire resistance beyond one hour can be achieved by the use of special one and a half or two hour fire-resisting doors or by using two sets of fire doors.

Fire-resisting doorsets should comply with the performance requirements for shape and strength as for heavy duty doorsets set out in Appendix D.

Rebated meeting stiles have been shown by test to provide less fire protection than square edged doors fitted with appropriate intumescent seals. They may prevent proper closing and their use is not recommended. They also require the provision of special forends to locks and latches and of door selectors to ensure correct closing sequence.

Fire resistance and smoke containment are easier to achieve when doors close against a stop. Although tests have shown that rebated frames are not necessary to achieve fire resistance, single swing doors closing against a stop are to be preferred to double swing ones. They are easier to fit and to maintain and present fewer problems in the selection and fitting of ironmongery.

Tests have shown that 25 mm stops make no greater contribution than do 12 mm stops to the ability of a doorset to resist smoke or fire.

Fire-resisting doors are normally required to be self closing and may only stand open if controlled by "fail-safe" mechanisms linked to an automatic fire alarm system. However, exceptions do occur, eg with ducts and with hospital accommodation for the elderly (as described in HBN 37).

Doors provided solely for means of escape in case of fire are not necessarily required to be fire resisting.

Any perforations, such as grilles, or undercutting a door to facilitate air transfer will invalidate the fire resistance of the doorset and an alternative method of air transfer should be used, such as ducting and a fire damper, located in the partition.

Identification

Fire-resisting doorsets must be supplied with an identification plate on the door leaf showing the name of the manufacturer and the date of manufacture. In addition, each fire-resisting doorset must be identified as shown below (see also HTM 65 and HTM 81):

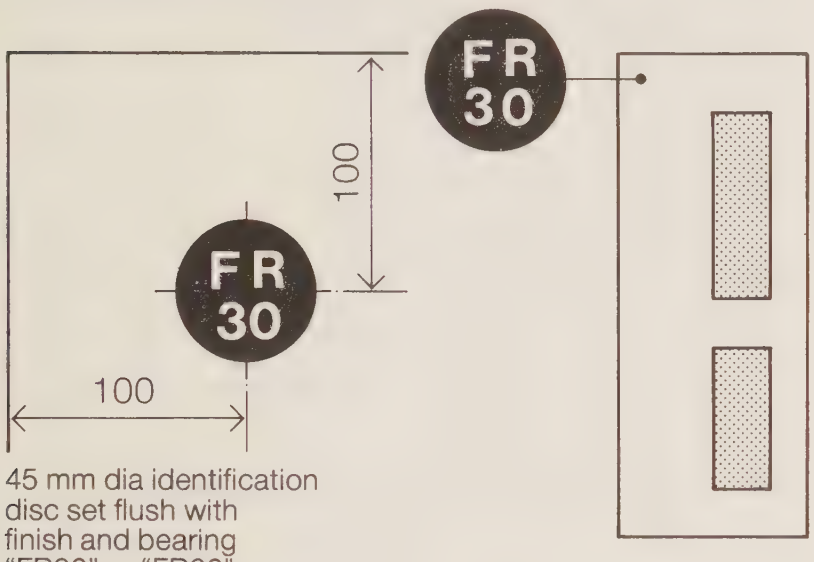

45 mm dia identification disc set flush with finish and bearing "FR30" or "FR60"

Glazing

Panels should be glazed in accordance with BS 6262 using 6mm georgian wired clear glass.

Glass should be fitted into 'monolux' channels, or glazed with hardwood beads with scarlet pvc covered intumescent glazing strips fixed with brass screws and sockets, all according to manufacturers' details and test requirements.

2.8.2 Smoke containment

It is essential to distinguish between requirements for fire resistance and smoke containment.

There is no additional requirement for fire-resisting doorsets to be "smoke-proof" nor are doors which are intended to limit the spread of smoke necessarily required to be fire resisting, although the two functions may well coincide. BS 476: Part 31 describes a standard method of test for the resistance of doorsets to the passage of smoke but at present there are no statutory requirements for smoke containment nor is there any definition of smoke; therefore it is not possible to give specific recommendations.

Closed doors are by far the most important contribution to controlling the spread of smoke. Doors which are held open, even when held by detentes, will allow smoke to spread rapidly.

Gaps between leaf and frame should be kept to the minimum specified to reduce the risk of smoke penetration. If seals are fitted to edges of leaves, the width of gaps may need to be increased.

Great care is needed to ensure that the provision of smoke seals or brushes does not detract from the proper functioning of the doorset. This is particularly significant, for example, at the meeting stiles of double doors or any situation where the doors may be inhibited from closing by the provision of seals.

Any perforations, such as grilles, or undercutting a door to facilitate air transfer will nullify the ability of a doorset to prevent spread of smoke.

2.9 Sound insulation

Any perforation in a partition will reduce the overall sound insulation performance of the partition as a whole and sound transmission through a doorset will invariably be greater than that through the partition in which it is fixed. Guidance on levels of sound insulation that can be achieved with internal partitions is given in HTM 56, Partitions.

A well fitting door of solid core construction will usually achieve a sound insulation of 15 to 20dB. A higher standard can be achieved by heavier grade doorsets with the gap between frame and partition carefully filled. If even higher levels of insulation are required it may be better to provide two doorsets with a lobby between. Seals may be required between leaves and frames.

Any perforations, such as grilles, or undercutting a door to facilitate air transfer will radically reduce sound insulation values.

2.10 Hygrothermal performance

Hygrothermal conditions can affect the performance of doorsets.

Normal conditions likely to be met in health buildings are:

- 25% to 65% relative humidity over a temperature range of 10°C to 25°C.

In areas of high humidity, such as laundries and shower rooms, the conditions would be:

- 25% to 100% relative humidity over a temperature range of 10°C to 100°C.

The selected doorsets must be able to withstand these conditions without loss of performance or appearance.

2.11 X-ray protection

Doors to rooms containing X-ray equipment will be required to provide resistance to X-rays. The National Radiological Protection Board establish and advise on shielding requirements and specifiers should discuss project requirements with the local Radiological Protection Adviser.

In most circumstances sufficient shielding will be provided by 1.5 to 2.5 mm of lead sheet.

The shielding must be continuous across leaf and frame and gaps at meeting stiles should be masked by an overlapping shielded cover-mould.

Vision panels must be restricted in size and should be glazed in accordance with BS 6262 using X-ray resistant glass to give shielding equal to that provided by the door.

Depending upon layout and fire containment requirements X-ray doorsets may additionally be required to provide fire resistance. Although such doorsets are available it would be advisable to avoid using X-ray resisting doorsets in fire rated walls.

Any perforations, such as grilles, or undercutting a door to facilitate air transfer may nullify the X-ray resistance of a doorset.

X-ray resisting doorsets should meet all the shape and strength requirements in Appendix D.

2.12 Evaluation and certification

The specifier should stipulate required levels of performance based upon information contained in this HTM.

Evaluation will fall into two categories:

- quality control on site (see **5.6**)
- specified testing leading to certification.

Quality control procedures on site may be applied to all the doorsets on a project and the procedures are described in Methods of Test 1 to 4 in Appendix D. They are non-destructive.

Testing by Methods of Test 5 to 10 in Appendix D and testing for fire resistance, may be applied to representative doorsets on a project or in a production batch. The specifier must decide whether to accept certification (by the manufacturer or by a third party) or to conduct his own tests. Requirements for testing and/or certification must be included in project documentation.

3 Design application

3.1 Partition and frame thickness

The first item to be considered when selecting and specifying doorsets is the construction and overall finished thickness of the partitions or walls into which thay are to be fitted.

The designer may also wish to decide between one-piece and split-frames at an early stage. Different manufacturers offer different frame constructions but all are able to match any partition thickness.

Internal partitions for health buildings are described in HTM 56. Many will be formed of plasterboard on metal studs to an overall thickness of 100 mm.

However, it is essential to pay close attention to the interface between partition and doorset and to the details of fixing. For partitions up to 150 mm thick the one-piece frame is usually made to match the partition; beyond that thickness it is usual to add an extension lining.

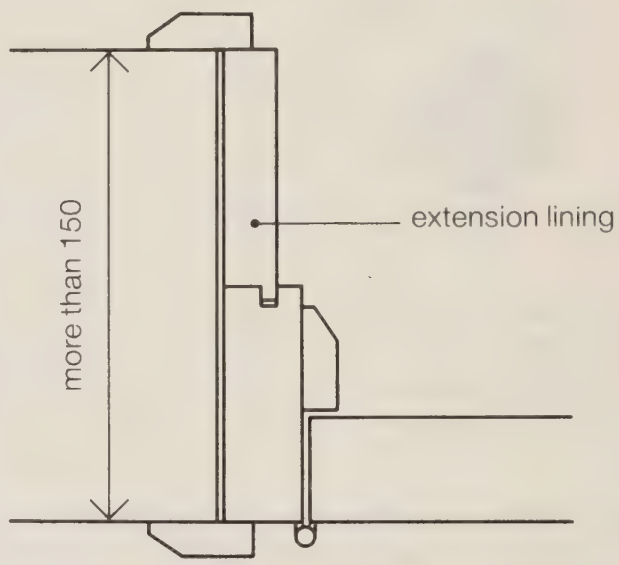

The split frame is normally made to suit 100 mm partitions but can be extended to suit thicker partitions by inclusion of a make-up piece.

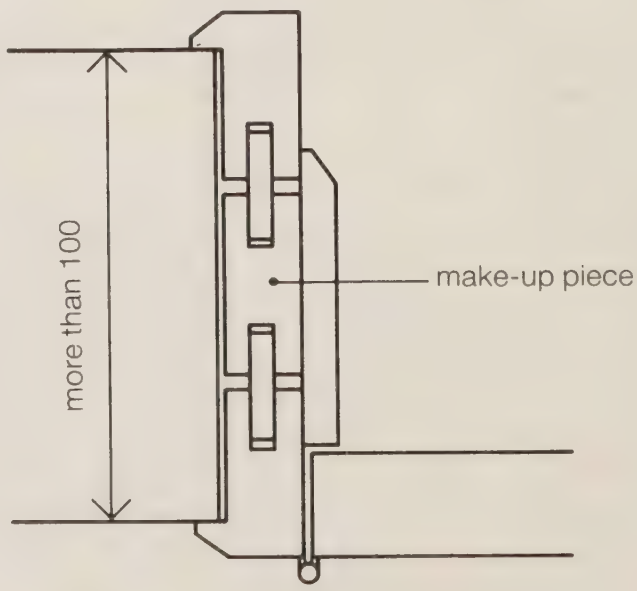

3.2 Layout and planning

The location of door openings will be largely determined by reference to room layouts and it is important to allow a nib of not less than 50 mm in order to accommodate fixing, full architraves, and projecting items of ironmongery.

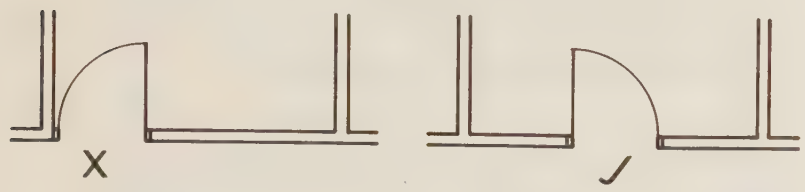

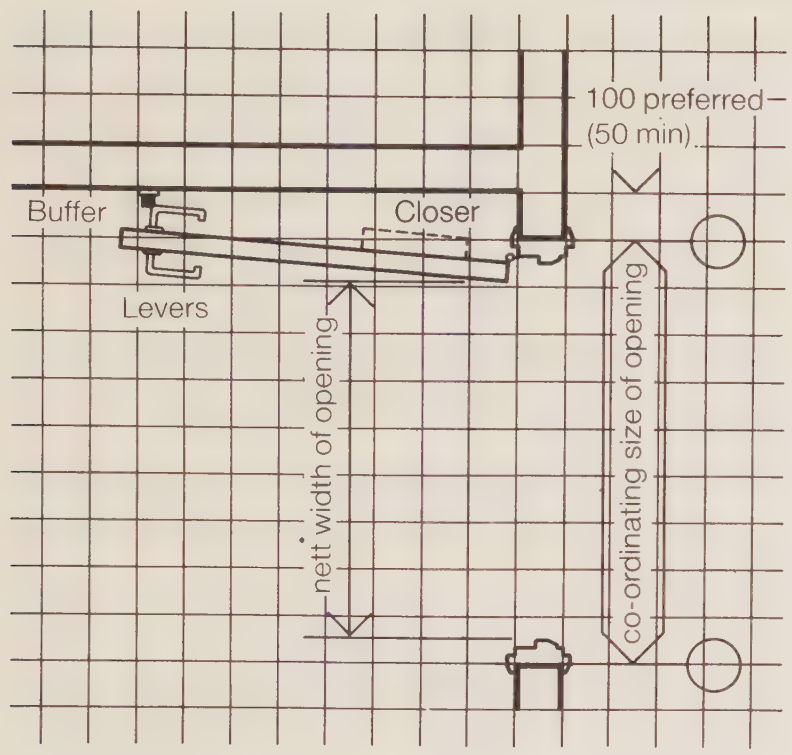

3.3 Emergency access to patients

Where access to patients may be required in an emergency eg in WCs and bathrooms, door leaves with the facility to open outward should be provided. This may be achieved with:

- outward opening single swing door leaves
- single swing door leaves normally opening inwards but with the facility to open outwards by the removal of the stops
- special ironmongery which allows a catch stop to be removed or depressed.

Pivot hinges will be required in all cases. See HTM 59, Ironmongery.

4 Project documentation

4.1 Drawings and schedules

Doorsets should be fully detailed and scheduled in project documentation to enable them to be manufacturered and delivered to site for fitting into prepared openings.

General arrangement drawings

Layout drawings should show:

- the location of each doorset
- the door configuration
- a unique reference number

Detail drawings

Detail drawings should show:

- the construction of openings at floor, jambs, and head
- the means of packing and securing the doorset into the opening
- any provision to seal the gap between partition and back of frame
- the general form of frame – one-piece or split.

Design details are included in Appendix A.

Schedules and codes

A suggested form of schedule and code is given in Appendix B.

The schedule should record the key characteristics of each doorset (including ironmongery) and any special requirements. It should also include partition or wall thickness.

4.2 Specification

The project specification should include a full description of materials and workmanship for both construction and finishes.

Specifiers should refer to Appendices A and C for source material for the preparation of project specifications.

Performance requirements and methods of test for shape and strength of doorsets are given in Appendix D.

4.3 Bills of quantities

Doorsets should be enumerated and described as composite components in the bills. Factory fitted ironmongery purchased by the doorset manufacturer should be described as such. Doorsets should be fully described in plain language and any coding system used by the design team to identify components should not be used in the bills, as tenderers can not be responsible for interpreting codes. Builders work involved in the installation of doorsets may vary in

accordance with the manufacturers product details and fixing instructions. Where a particular range of doorsets has been selected by the design team these details will be known and can be measured. Where fixing details are not known at pre-contract stage other arrangements will have to be made, eg use of a provisional sum.

4.4 Methods of procurement

Procurement of doorsets will be by the main contractor within the main contract. They are generally delivered to the site by the supplier and fixed by the main contractor.

The choice of a supplier may be left to the main contractor, but if the design team has selected a particular range of doorsets they may be specified in the bills by the manufacturer's name and trade name of the doorsets. Should the design team wish the doorsets to be supplied and fixed by the manufacturer three firms must be listed in the bills to comply with clause 19 of the 1980 editions of the JCT Form of Contract.

When selecting a supplier use may be made of the previous CDB Mark 3 list of firms, or the current PSA Method of Building list of approved suppliers which is based on PSA product evaluation and testing.

The performance requirements upon which the CDB list and the PSA programme was based are similar to those in this HTM.

Proprietary doorsets offered by any firm should be evaluated by the specifier to ensure that they comply with specification and performance requirements in Appendices A, C and D, and test evidence should be provided by the manufacturer for this purpose.

Before specifying doorsets from a single source of supply it would be advisable to visit the manufacturer's factory and buildings where his doorsets have been used. As an aid to selection and to quality control on site samples of doorsets and finishes should be inspected and maintained during the contract.

5 Site practice

5.1 Programme

Doorsets are factory produced components with good quality finishes and should never be built in as the work proceeds. They should be brought onto site during the finishing stage when the building is completely weathertight, all wet trades completed and sufficiently dried out and the internal environment is controlled.

5.2 Delivery, handling and storage

Doorsets should be packed and wrapped by the manufacturer so as to avoid distortion and damage during transportation and handling. If they have to be stored on site prior to installation proper storage facilities must be provided.

Immediately after delivery to the site, the moisture content of the doorsets should be checked.

Each doorset should be labelled to enable it to be delivered to its correct location and to minimise handling on site.

The main contractor should make appropriate provision for their protection until the building is handed over.

5.3 Preparatory site work

Openings to receive doorsets should be constructed larger than the co-ordinating size of the doorset (see HTM 56, Partitions) and be provided with adequate fixing points. It is recommended that openings be formed around sub-frames or templates. Before attempting to fit a doorset, check the opening for size, plumb, and squareness to ensure it conforms to specified tolerances.

Check that the doorset conforms to the specification including permitted tolerances on size, shape, and twist. Do not adapt the doorset to suit an inaccurate opening.

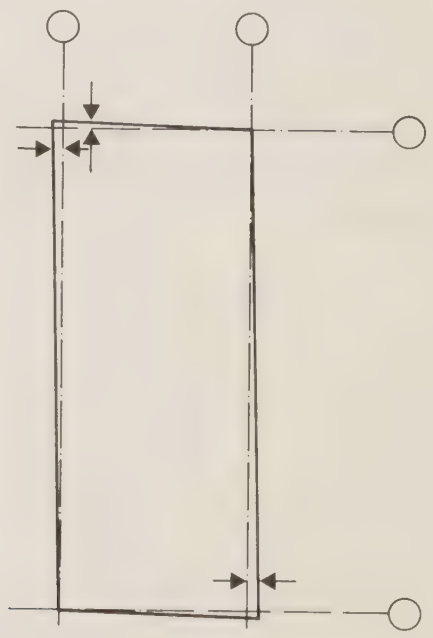

Before removing the door leaf from its frame, mark leaf against frame to retain correct leaf/frame match.

5.4 Installation

Doorset frames should be supplied pre-drilled for steel countersunk screws at the fixing points shown below. They should be installed in accordance with the manufacturer's instructions. It is important to secure the frame at *all* fixing points in order to ensure correct operation.

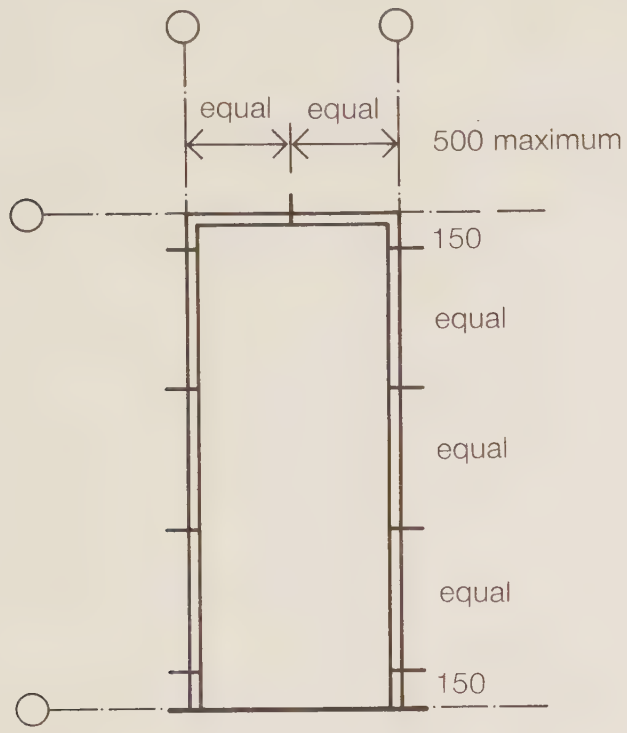

Head fixings are required at 500 centres (except to 600 wide doorsets). These are particularly important in the case of wide doorsets with loads imposed by closers, etc.

The joint between partition and frame will materially affect the overall performance of the finished construction.

There must be a solid bearing between edge of opening and back of frame at every fixing point in order to ensure the frame is not distorted and to transmit opening/closing forces through the frame into the partition.

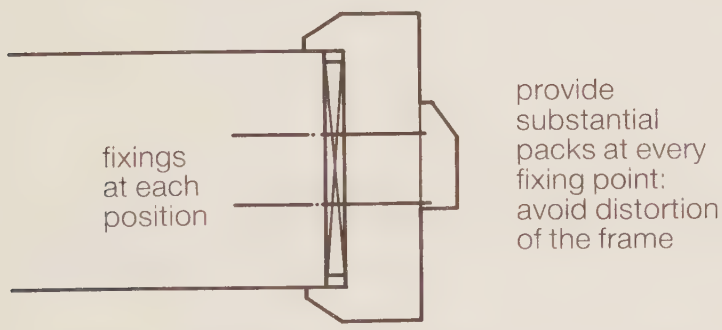

Architraves must cover the joint with adequate overlap onto the finished surface of the partition.

If the construction is required to provide sound insulation or to limit the spread of smoke, direct airpaths must be avoided and any gaps between partition and doorset filled.

If it is required to provide fire resistance or X-ray protection any gaps must be protected.

For sound insulation dense filling, such as plaster, will be required. Smoke containment can be achieved by packing gaps with a fibrous material such as mineral wool. Fire resistance can be achieved by the use of intumescent material or if the gap between frame and partition is accessible and at least 10 to 15 mm wide by plaster fill, or by packing with mineral fibre.

Foam fillers available in spray can packs for site application can provide an effective gap seal, also they provide an effective adhesive which can contribute to a solid fixing.

For X-ray protection it is essential to ensure that shielding details extend to cover any gaps in the partition/frame joint.

5.5 Typical fixing detail

At each fixing point packing pieces of wrot softwood, hardboard or plywood 90 x 90 should be provided to ensure an adequate background fixing for screws of specified length and size.

Frames should be secured to background with steel screws.

Architraves and door stop should be secured with lost head panel pins and punch home.

Screw heads in frames with a clear finish should be covered by pellets.

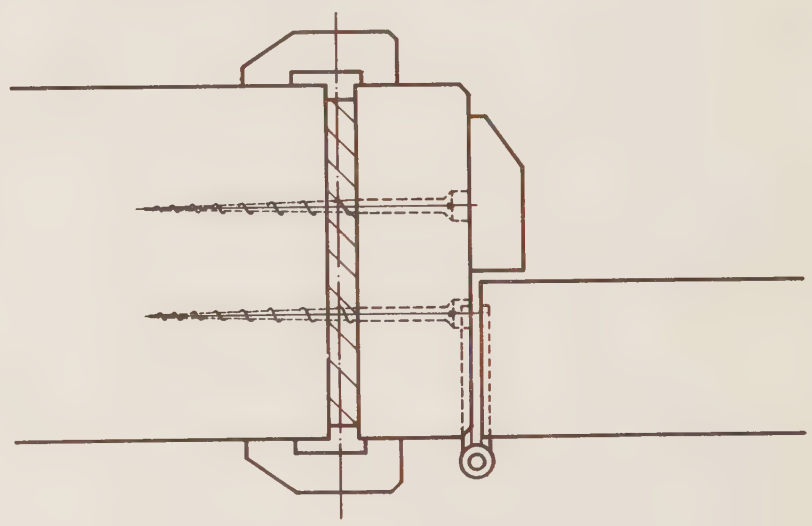

5.6 Quality control and testing

All doorsets should be checked after installation to ensure that gaps between leaves and frames do not exceed those specified and that adequate sealing between frame and opening has been provided.

The checking of fire-resisting doorsets and their requirement to provide smoke containment and sound insulation is particularly important.

Methods of assessment and test are given in Appendix D.

As part of normal quality control procedures on site, doorsets should be evaluated for shape (under Methods of Test 1 – 4) and for appearance and for adequacy of factory preparation to receive site applied finishes.

6 Maintenance

Doorsets should be cleaned and disinfected at regular intervals in accordance with domestic services management routines.

Ironmongery correctly selected and fitted requires very little maintenance (see HTM 59, Ironmongery).

Broken or damaged glass in doorsets should be replaced without delay particularly in the case of fire-resisting doorsets where the performance of the doorset must be maintained at all times.

Intumescent strips on fire-resisting doorsets should be inspected regularly and replaced if damaged.

Appendices

A Design details

A1. Range of doorsets

The following range of doorsets has been derived from the characteristics of size, configuration and glazing described in Section 2 of this HTM. Doorsets may be medium or heavy duty, 30 mins or 60 mins fire-resisting or X-ray resisting grades (subject to notes below).

*Special care should be taken when specifying the 1300 wide doorset as the size and weight of the leaf impose very substantial loads on the frame and hanging device. This size of doorset is generally not available in fire-resisting grades.

Fully glazed doorsets are not generally available in 60 min fire-resisting grade.

X-ray resisting doorsets are not available with glazed panels as shown.

A2 Common details for all doorsets

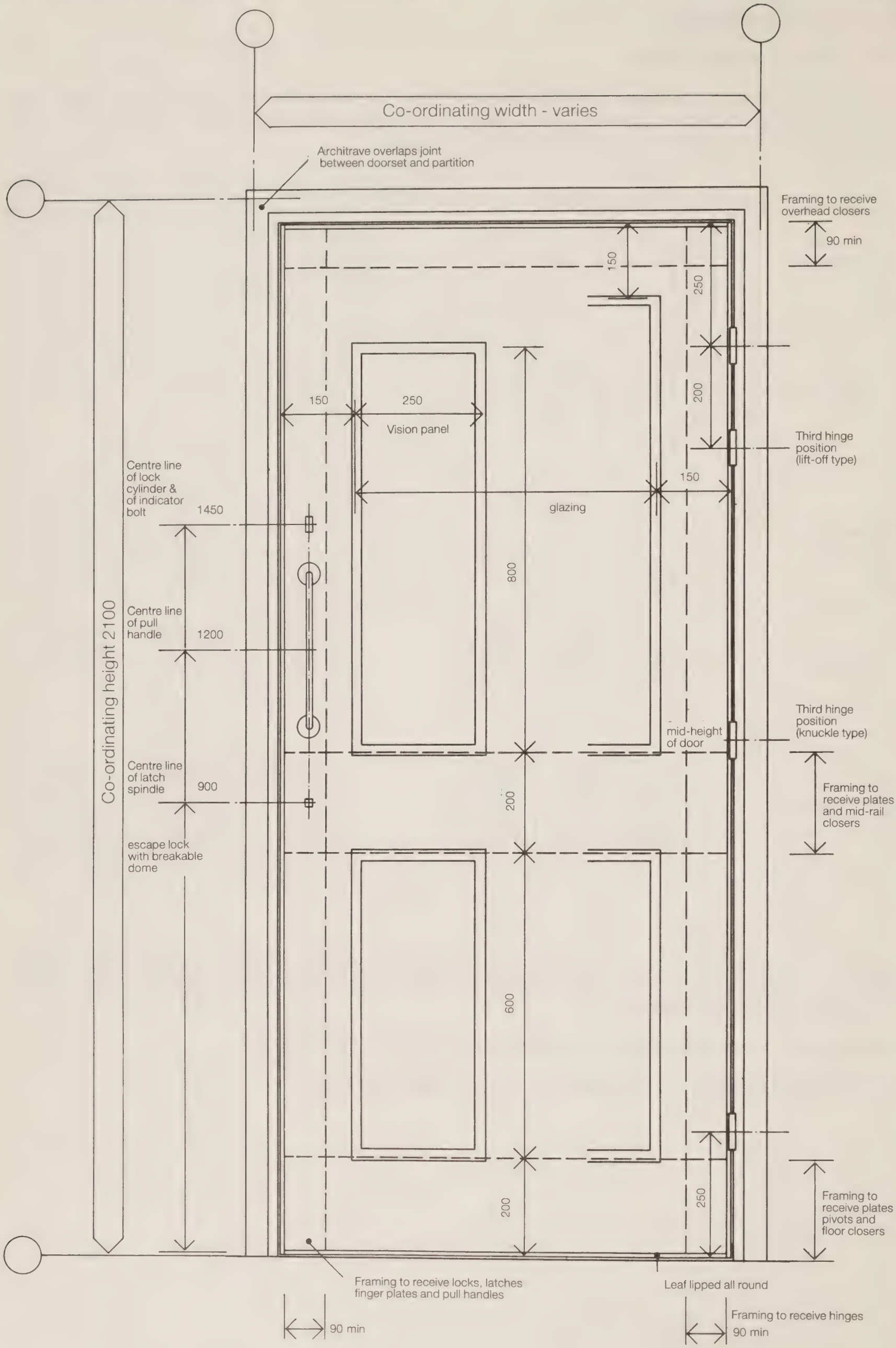

A3 Common dimensions and profiles – single swing doorsets

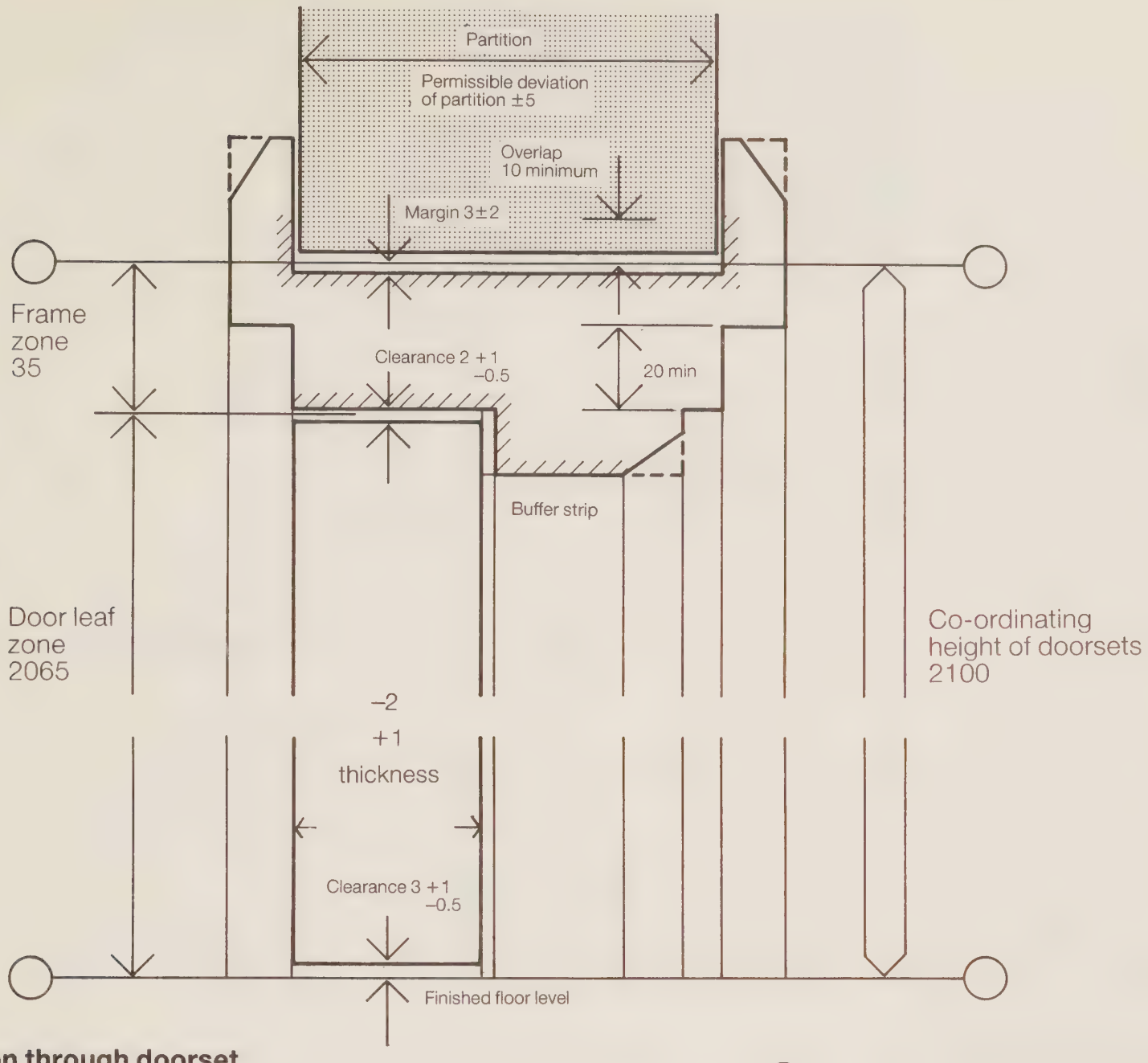

Section through doorset

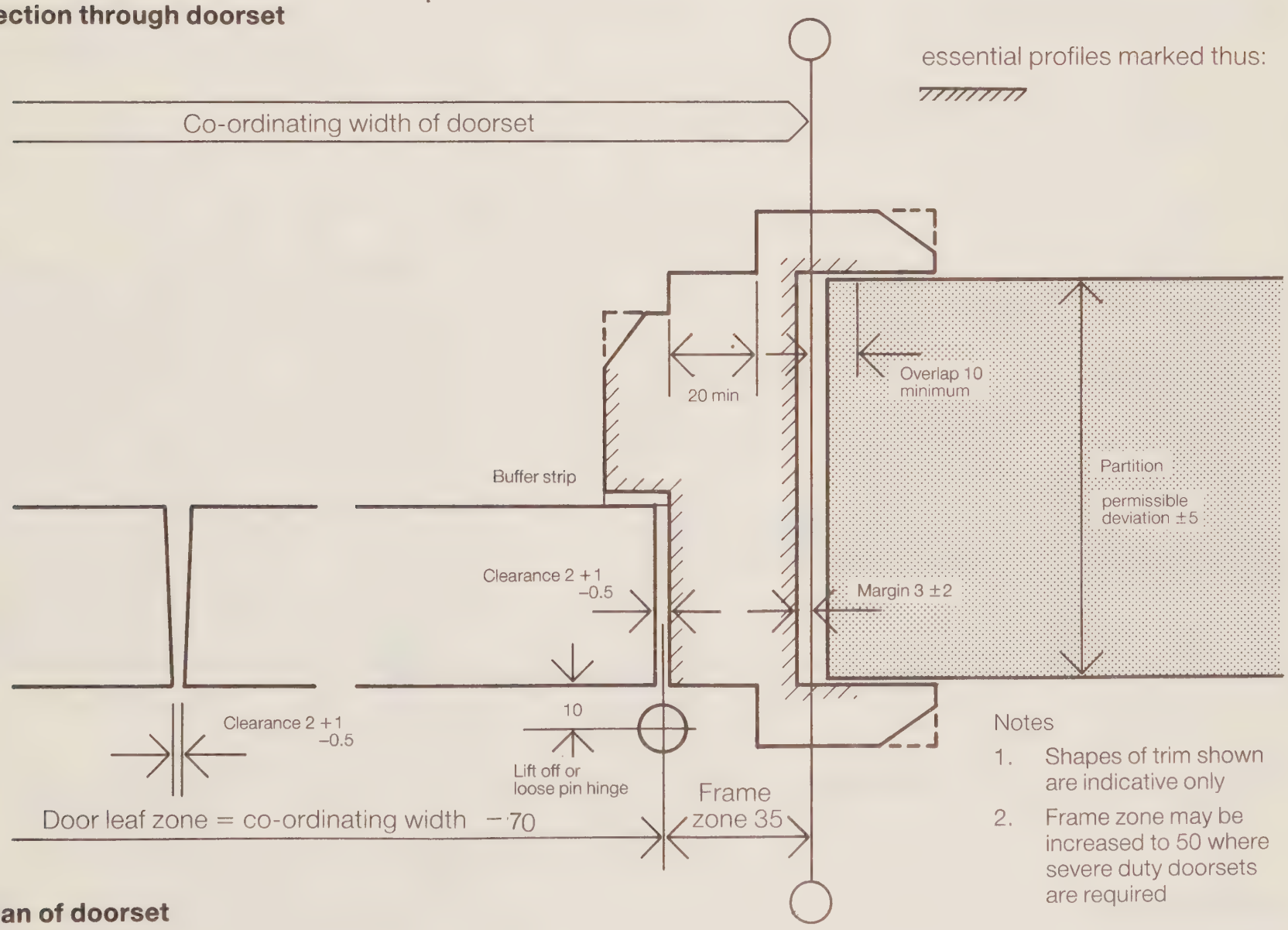

Notes

1. Shapes of trim shown are indicative only
2. Frame zone may be increased to 50 where severe duty doorsets are required

Plan of doorset

A4 Common dimensions and profiles – double swing doorsets

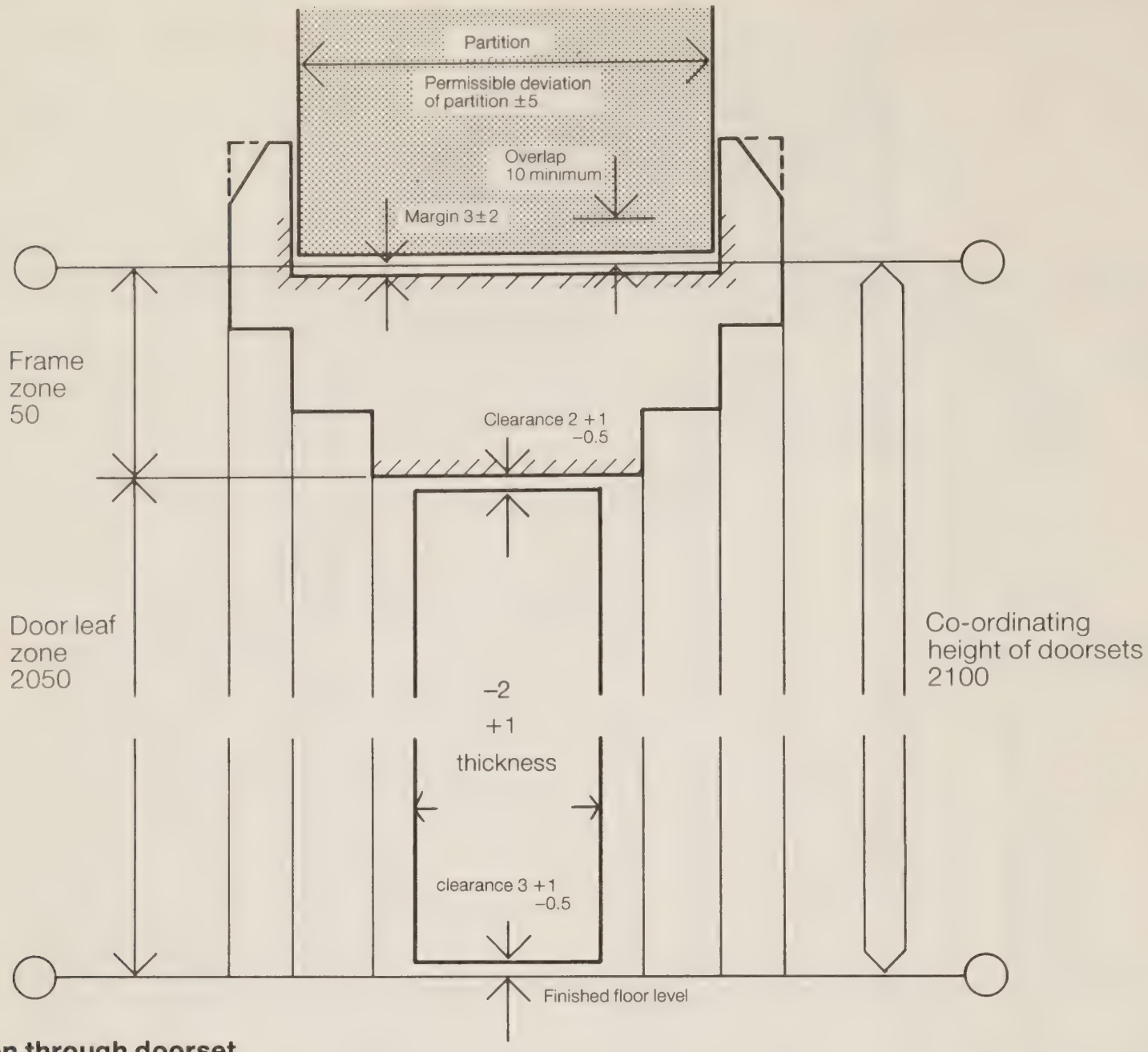

Section through doorset

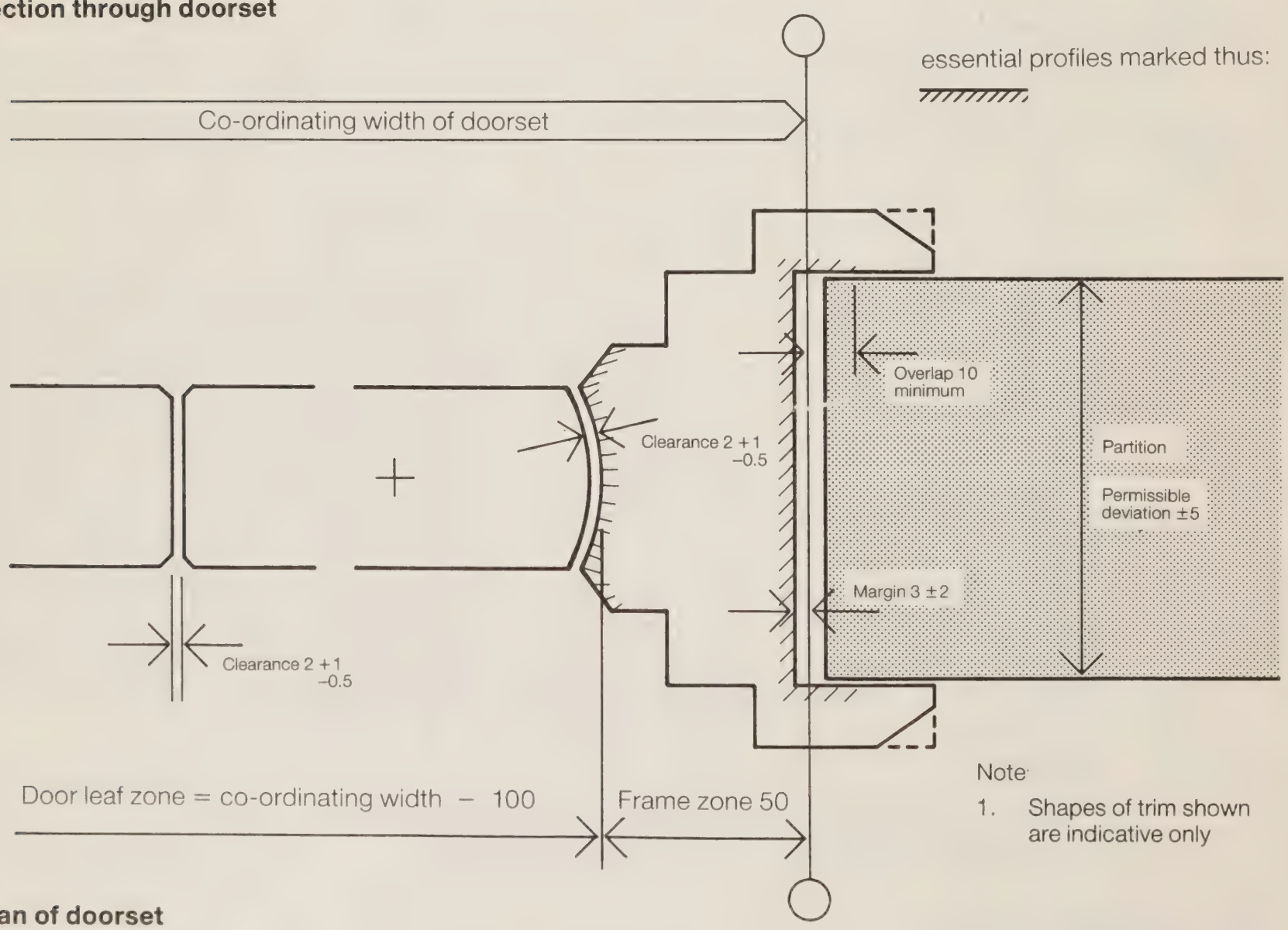

Note:

1. Shapes of trim shown are indicative only

Plan of doorset

A5 Common details to match CDB fire-resisting doorset designs

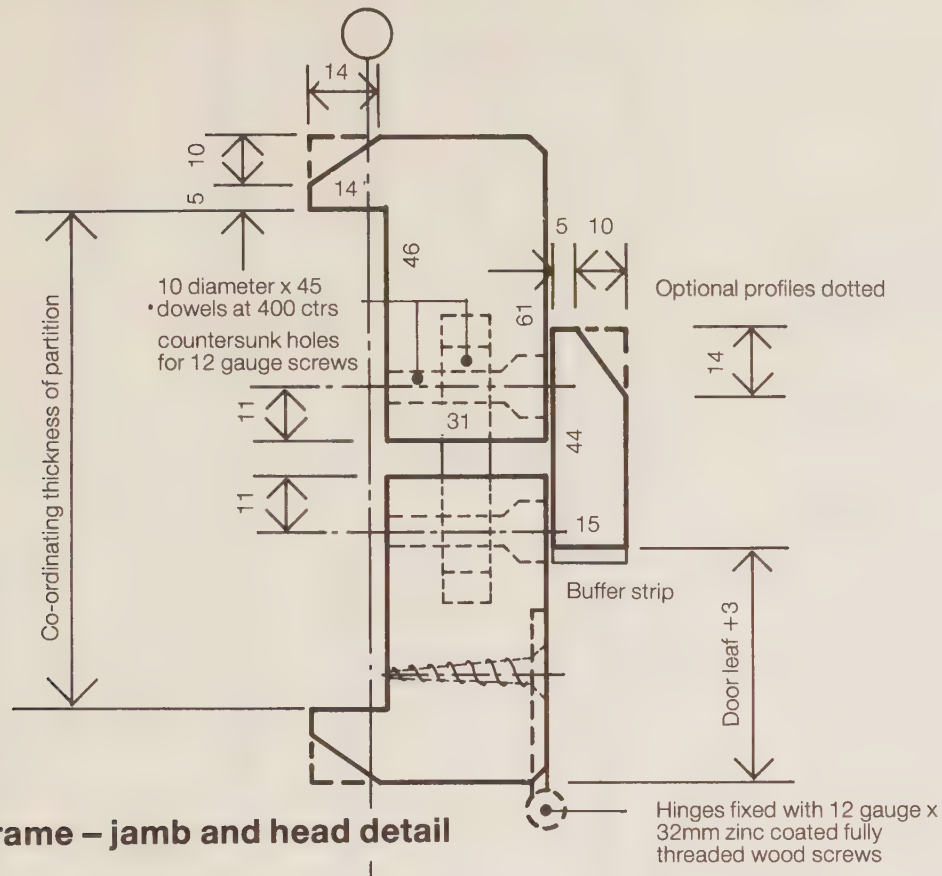

Split frame – jamb and head detail

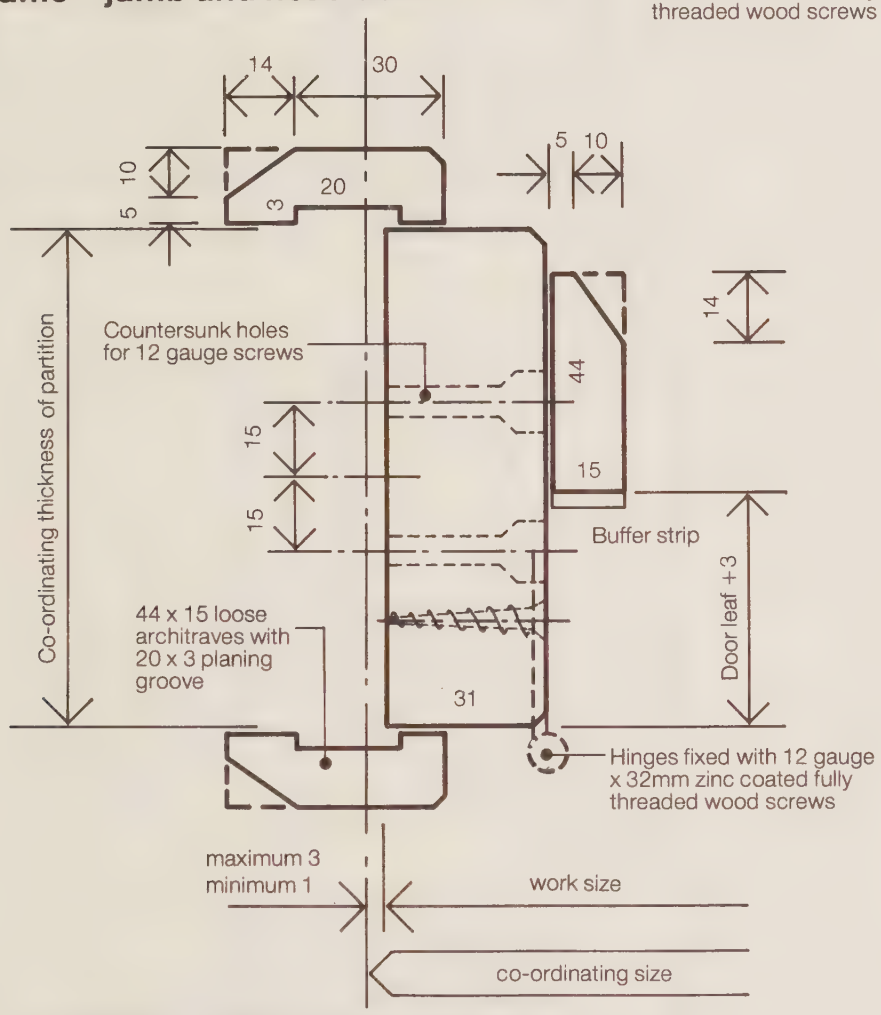

One-piece frame – jamb and head detail

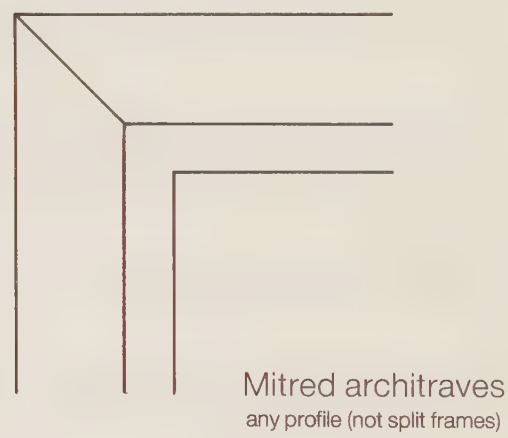

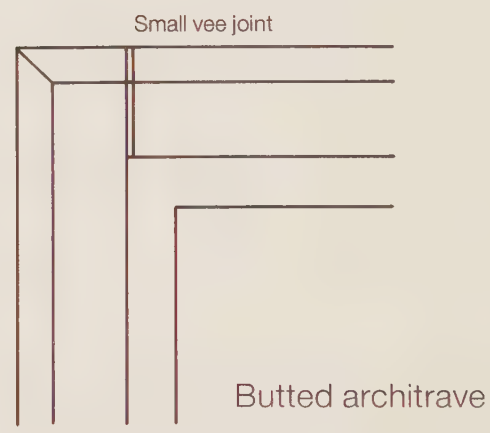

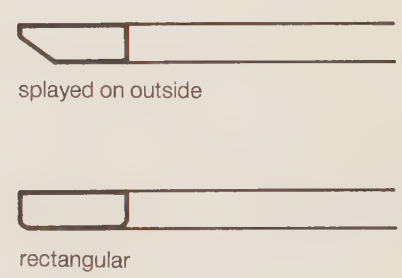

Architraves

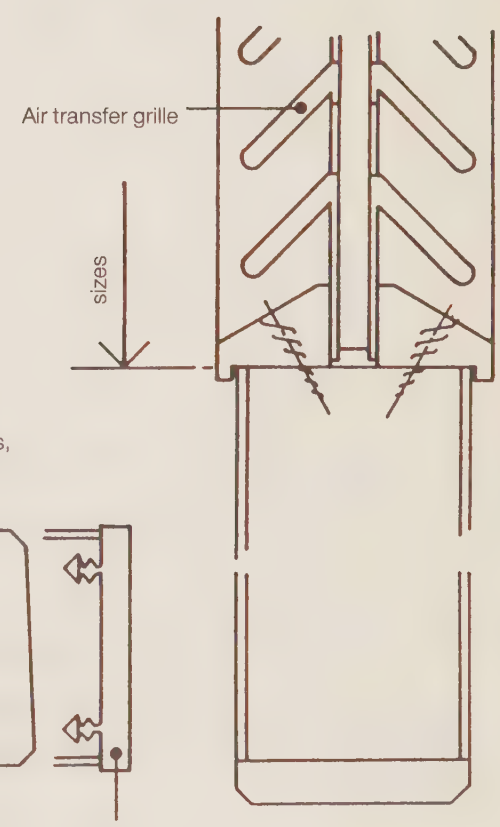

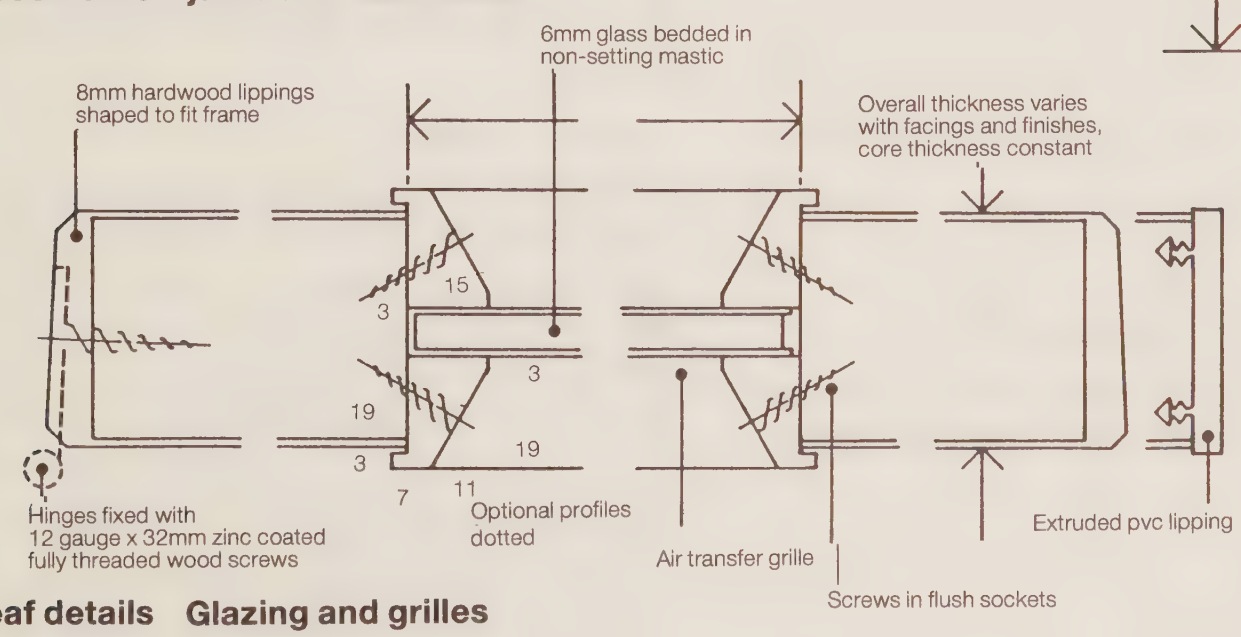

Door leaf details Glazing and grilles

B Schedules and codes

Schedule

The preparation of a doorset and ironmongery schedule for each project is strongly recommen-ed. A model schedule is given on page 20.

As a first step it is necessary to identify each doorway by a unique reference which can be shown on the layout drawings and entered on the schedule.

For example:–

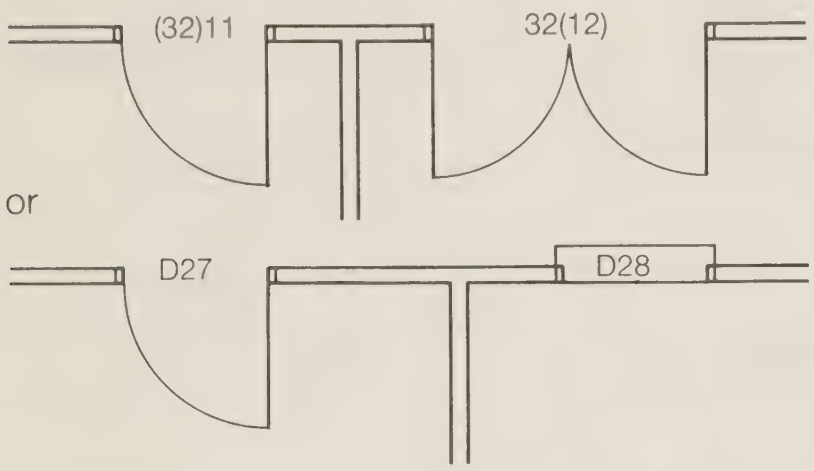

The schedule can then be used to enter specific information which can be progressively refined as the project proceeds from initial design to project documentation.

Code

Having determined partition thickness the doorsets should be coded by nominating in sequence each of the following facets. The result will be a mnemonic code which will facilitate scheduling and cross referencing.

Facet 1 – Size

- co-ordinating height 2100
- commonly used co-ordinating widths are:
  - Single leaf 600, 800, 900, 1000, 1300
  - One and a half leaf 1500
  - Double equal leaves 1500, 1700, 1900

The size of a doorset can be identified by its width in multiples of 100:
thus = 2100 x 600
19 = 2100 x 1900.

Facet 2 – Configuration and handing

Single leaf doors may be single swing, ie left or right hand or double swing, symmetrical and non-handed.

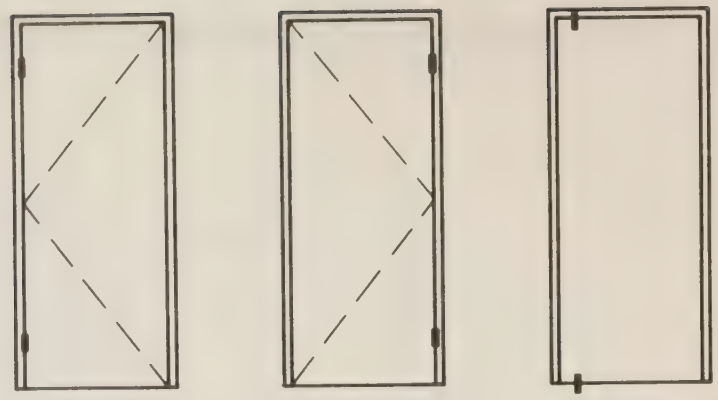

Left hand single swing — Right hand single swing — Single leaf double swing

One and a half leaf doorsets will usually be single swing, left or right hand.

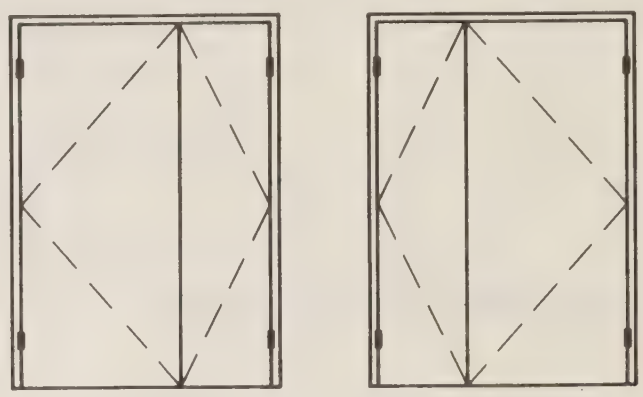

Left hand single swing — Right hand single swing

Double leaf doors are symmetrical and therefore non-handed. They may be single or double swing.

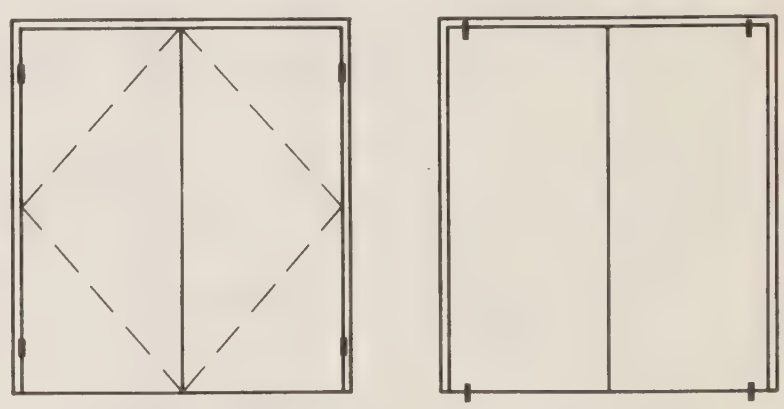

Single swing double doors — Double swing double doors

Door configuration can be identified by a single letter thus:

L = left hand single swing
R = right hand single swing
S = single swing double doors
D = double swing double doors
E = either swing (emergency release) doors

Facet 3 – Grade

The grade of each doorset can be identified by a single letter thus:

M = medium duty
H = heavy duty
30 = hour hour fire-resisting
60 = one hour fire-resisting
X = X-ray resisting

Facet 4 – Glazing

Not all doorsets will have vision panels. When scheduling doors with no glazing the fourth facet of the reference code should be left blank.

V = one vision panel

G = half glazed

VV = two vision panels

GG = fully glazed

Other sizes or shapes of vision panel and any special requirements as to type of glass or means of obscuration can be annotated by notes on the schedule, eg **SV** = special vision panel.

Facet 5 – Finish to leaf/s

The surface material should be described under the appropriate specification clause together with the description of any preparatory work. Surface finish may be identified by a single letter thus:

P = painted
C = clear
S = stained
H = high impact pvc sheet
L = decorative melamine laminate

Facet 6 – Finish to frame

The density and/or type of timber may be described under the appropriate specification clause together with a description of any preparatory work. Surface finish may be identified by a single letter thus:

P = painted
C = clear
S = stained
E = sheathed in extruded pvc

Facet 7 – Special features

This facet should be used to identify any special features eg:

OD = Obscuration device **G** = Grille

Examples of mnemonic code

By use of the method described the specifier can readily build a simple mnemonic code which identifies all the significant features of the doorsets required on a project.

Thus: **10/L/60/V/P/P/–**
represents a 1000 wide doorset, left hand single swing, one hour fire resisting, with single vision panel, painted leaf in painted frame.

17/D/H/G/L/C/OD
represents a 1700 wide doorset, with twin double swing leaves, heavy duty grade, half glazed, with decorative melamine laminate leaves in a clear lacquered frame with obscuration device.

This level of information is sufficient for several purposes including estimating and cost checking.

Special features such as grilles and proprietary obscuration devices, can be identified by notes in the doorset schedule.

The ironmongery requirements for each doorset should be recorded on the same schedule as doorsets. Refer to HTM 59 for information on the selection and specification of ironmongery for internal doorsets.

Model doorset and ironmongery schedule

1 Room/Area Number/Name	2 Opening no./ Doorset ref.	3 Partition or wall thickness	Doorset							Ironmongery				
			4 Size	5 Configuration	6 Grade	7 Glazing	8 Leaf finish	9 Frame finish	10 Special Features	11	12	13	14	15
317 6 bed room	3(32)110	100	19	S	30	SG	C	P						

Notes and explanation of code

1 Refer to general arrangement drawings for location information

2 All openings 2100 co-ordinating height unless noted

3 Partition or wall thickness

4 Sizes are quoted in 100mm multiples
eg 6 = 600 co-ordinating width
13 = 1300 etc

5 Configuration is the handing and swing of a door(s) – the following types are:
L = Left hand, single swing
R = Right hand, single swing
E = Either swing
S = Single swing, double doors
D = Double swing, double doors
(on leaf and a half refer to large leaf only)

6 The grades are as follows:–
M = Medium duty
H = Heavy duty
30 = Half hour fire-resisting
60 = One hour fire-resisting

7 Glazing types are as follows:–
V = One vision panel
VV = Two vision panels
G = Half glazed door
GG = Fully glazed door
SG = Special glazing

8 Leaf finish
P = Painted
C = Clear
S = Stain
H = High impact pvc
L = Plastic Laminate

9 Frame finish
P = Painted
C = Clear
S = Stain
H = Pvc sheathing

10 Special features eg: grille or obscuration device – state manufacturer and reference

11, 12, 13, 14, Refer to HTM 59 Ironmongery

15 Special equipment

This schedule should be read in conjunction with project drawings and specification.

Title Panel

Appendix C

This specification incorporates the guidance contained in this HTM and is intended for the preparation of specifications, drawings and schedules of doorsets for a project, for the purposes of enquiries leading to the selection of a manufacturer, and for the preparation of quantities for inclusion in contract documentation.

The selection of this material, its contents and form of presentation to meet project requirements are entirely matters to be determined by the specifier.

Where a ⋆ symbol is shown, the item should be completed as required by the specifier.

Contents

C1 Introduction

C2 Physical characteristics and performance requirements

C2.1 Dimensions
C2.2 Thickness
C2.3 Constituent parts
C2.4 Shape
C2.5 Strength
C2.6 Door leaves
C2.7 Door frames
C2.8 Thresholds
C2.9 Screw fixings
C2.10 Glazing
C2.11 Surface treatment and finishes
C2.12 Buffer strips
C2.13 Ironmongery
C2.14 Fire-resisting doorsets
C2.15 Hygrothermal performance
C2.16 X-ray protection

C3 Materials

C3.1 Timber – generally
C3.2 Timber for fire-resisting doorsets
C3.3 Hardboard
C3.4 Wood veneer
C3.5 Plywood facings
C3.6 Plastic laminate facings
C3.7 PVC sheet facings
C3.8 Particle board
C3.9 Buffer strips
C3.10 Glass

C4 Accessories, fastenings, adhesives, sealants

C4.1 Profiles, coverstrips
C4.2 Fastenings
C4.3 Adhesives

C5 Workmanship

C5.1 Control samples
C5.2 Moisture content

C6 Machining and assembling

C6.1 Quality of work
C6.2 Dimensions

C7 Installation

C7.1 Fixing
C7.2 Fire-resisting frames

C8 Fixings

C8.1 Nailing
C8.2 Screwing to timber
C8.3 Pelleting

C9 Sundry work

C9.1 Hanging doors
C9.2 Ironmongery

C1 Introduction

All doorsets shall comply with the physical characteristics and performance requirements, materials and workmanship, and design details set out in Appendices A, C and D and the contract drawings.

C2 Physical characteristics and performance requirements

C2.1 Dimensions

Doorset sizes shown on drawings and schedules are co-ordinating sizes of the basic spaces they are to fill.

Openings to receive doorsets will be to tolerances of:

width	–0 +10
height	–0 + 5

Manufacturing tolerances and clearances are based on BS4787.

C2.2 Thickness

Doorsets shall be capable of accommodating deviations in partition/wall thickness of ±5.

C2.3 Constituent parts

Each doorset shall consist of frame, leaf (or leaves) and ironmongery.

Hinges or pivots are required with all doorsets and should be supplied as part of the doorset.

No constituent part shall contain material which would be detrimental to the comfort or safety of users, or which is known to give off appreciably toxic products during combustion.

C2.4 Shape

The maximum deviation of shape and surface flatness of the door leaves, when measured in accordance with Methods of test 1, 2, 3 and 4, shall be:

1.	Twist – as delivered	3
	– after 12 months in use	6
2.	Surface flatness	
	measured over 50	0.2
	measured over 200	0.6
3.	Squareness	1.5
4.	Cup and bow	
	as delivered – short edge	1.5
	– long edge	3
	after 12 months in use – short edge	3
	– long edge	3

C2.5 Strength

When tested in accordance with methods of test 5, 6, 7, 8 and 9 the doorsets shall meet the following requirements:–

5 Torsion resistance:

Medium duty grade:	
– maximum deflection	70mm
– residual deflection	3mm
Heavy duty grade:	
– maximum deflection	50mm
– residual deflection	3mm

6 Hard body impact resistance:

– impact energy level:	
Medium duty grade	3Nm
(to kick plate zone only	8Nm)
Heavy duty grade	8Nm

Not more than 20% of test drops shall result in a specified failure.

In tests 7, 8 and 9 no significant damage to the doorset or fittings shall occur, nor shall the action of the door be impaired.

7 Heavy body impact resistance:

– impact energy level:–	
Medium duty grade	50Nm
Heavy duty grade	100Nm

8 Resistance to slamming:
The test shall be carried out 10 times.

9 Resistance to abuse:

– applied force:–	
All grade of doorset	200Nm

C2.6 Door leaves

Door leaves shall be matched to their frames, be close-fitting and be capable of receiving the full range of ironmongery required. They should be set to their frame in such a way as to be readily demountable and should comply with the shape and strength requirements in C2.5 and C2.6.

All leaves shall incorporate members/material to accommodate the fixing of ironmongery. Due allowance shall be made for the morticing of ironmongery. Faced leaves shall be lipped with hardwood for the full thickness of the leaf to finish flush with the surface of the facing material.

Lippings shall be free from steel fastenings.

Plastic faced leaves may alternatively be lipped with extruded plastic lippings.

Fully glazed or half glazed leaves made from solid timber stiles and rails shall be framed and jointed with mortice and tenon joints and of at least 44 thickness and to the sizes shewn on A2.

C2.7 Door frames

- ★ Door frames should be constructed from hardwood to the details.
- ★ Door frames shall be constructed from softwood to the details.
- ★ X-ray resisting door frames must incorporate lead shielding of ..... thickness.
- ★ Frames shall be split frame pattern with integral architraves.
- ★ Frames shall be of one piece pattern with loose architraves.

Frames shall be framed and jointed together and pre- drilled for screw fixings at each of the positions in head and jambs as follows:

There shall be four fixings in each jamb, positioned 150 from top and bottom of jamb and equally spaced between. Head fixings shall be at maximum of 500 centres (600 wide doorsets do not require head fixings).

C2.8 Thresholds

Timber thresholds shall be framed and jointed to jambs and set flush with top of floor screed.

- ★ Thresholds shall be made in hardwood.
- ★ Thresholds shall be made in softwood impregnated against decay.
- ★ Thresholds shall be morticed to receive floor springs or pivots.

C2.9 Screw fixings

All exposed screw fixings to frames shall be pelleted with hardwood or plastic pellets.

Glazing heads shall have

- ★ Screw fixings with sockets on both sides.
- ★ Screw fixings with flush sockets on one side and be glued and pinned on the other side.

C2.10 Glazing

Panels shall be glazed in accordance with BS6262 as follows:

Medium and heavy grades –
6 toughened or laminated safety glass
Fire resisting grades –
6 Georgian wired clear glass

- ★ glass shall be of obscured type.

C2.11 Surface treatment and finishes

Door leaves shall be finished in:

- ★ Primer for painting
- ★ Clear Finish
- ★ Stain
- ★ Plastic laminate
- ★ High impact PVC

Door leaves shall have flat, true and smooth surfaces.

Natural timber veneer facings shall be made up from strips of veneer matched and laid with the longitudinal edges close butted to give hairline joints. There shall be no cross joints between strips of veneer. Other facings shall be cut from one sheet.

Plywood facings shall be close grained, filled if necessary, to provide a smooth face for subsequent painting.

All arrises shall be eased.

Door frames shall be finished in:

- ★ Primer for painting
- ★ Clear finish
- ★ Stain
- ★ PVC facings

Door frames, including architraves and stops, shall have flat, true and smooth surfaces, and all arrises shall be eased.

Components fabricated from similar materials shall be consistent in grain, colour and texture on all visible surfaces and throughout the doorsets in any one project.

All surface finishes should be completed before ironmongery is fitted.

When tested in accordance with BS3962 – methods of test 2 to 6 – the surface treatment of factory finished doorsets shall have a resistance rating of not less than 3.

C2.11.1 Cleaning and disinfection

All doorsets, including those with site applied finishes, shall be capable of withstanding:

- washing with hot water containing a mild non-abrasive detergent as part of a regular cleaning routine.
- disinfection by any of the disinfectants in general use in health buildings.

C2.12 Buffer strips

Buffer strips shall be fitted to rebates of all single swing doorsets.

C2.13 Ironmongery

- ★ Doorsets shall be supplied as complete components with all ironmongery delivered to the doorset manufacturer and fitted at works
- ★ Doorsets shall be supplied with all morticed items of ironmongery fitted at works and projecting items delivered loose and fitted on site
- ★ Doorsets shall be morticed and fully prepared for ironmongery at works, to receive ironmongery to be fitted on site.

C2.14 Fire resisting doorsets

Fire resisting doorsets, complete with ironmongery, should be tested in accordance with BS476 parts 20 and 22 and shall achieve 30 mins and 60 mins fire resistance.

Test evidence shall be available. Evidenec to BS476 part 8 will be acceptable until 1992.

Tests for fire resistance shall be carried out after other testing has been completed.

Fire resisting doorsets shall comply with the performance requirements for strength as for heavy duty doorsets.

Identification
Fire resisting doorsets must be supplied with an identification plate fixed on top or hinge edge of the door leaf showing the name of manufacturer and date of manufacture. In addition each doorset must be identified as shewn below (see also HTM 65 Signs and HTM 81)

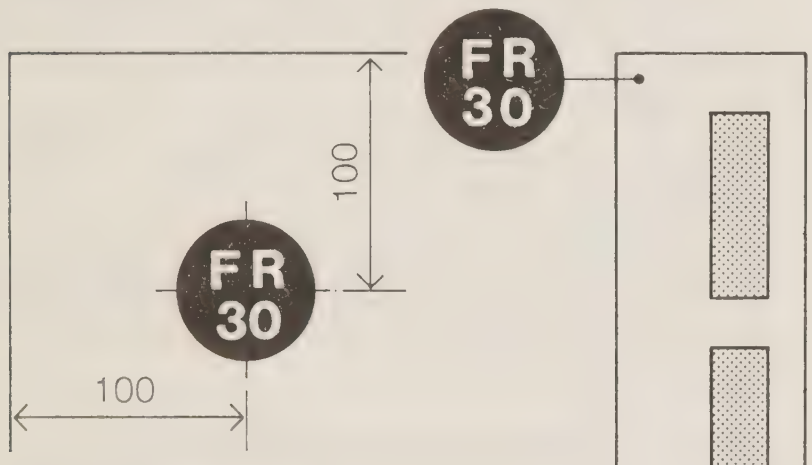

45 mm dia identification disc set flush with finish and bearing "FR30" or "FR60"

Glazing
Panels shall be glazed in accordance with BS6262 using 6mm georgian wired clear glass. Glass shall be fitted into glazing channels or with beads to a system that has been successfully tested in the door.leaf construction specified to BS476 parts 20 and 22.

C2.15 Hygrothermal performance

The doorsets must be able to withstand the following conditions without loss of performance or appearance:

Normal conditions likely to be met in health buildings are:

25% to 65% relative humidity over a temperature range of 10°C to 25°C.
In areas of high humidity, such as laundries or shower rooms, the conditions would be:

25% to 100% relative humidity over a temperature range of 10°C to 30°C.

C2.16 X-ray protection

X-ray resisting doorsets should meet all the shape and strength requirements for Heavy duty doors.

X-ray resisting doorsets must contain lead sheeting of *..... thickness.

The shielding must be continuous across leaf and frame and gaps at meeting stiles should be covered by an overlapping cover mould.

Vision panels must be restricted in size and glazed in accordance with BS6262 in x-ray resistant glass to give shielding appropriate to that provided by the door generally.

C3 Materials

C3.1 Timber – generally

Timber shall be in accordance with BS1186 Part 1 "specification for timber" and as amplified below:

Hardwood to receive a clear finish shall be – Class CSH

- ★ species selected from Appendix C of BS1186 Part 1
- ★ Species .....

Hardwood to receive a painted finish shall be

- ★ Class 1
- ★ Class 2

species shall be selected from Appendix C of BS1186 Part 1.

Softwood to receive a clear finish shall be

- ★ Class CSH
  species – Douglas Fir, Western Hemlock or selected European Redwood.
- ★ Class 1
  species – Douglas Fir, Western Hemlock or selected European Redwood.

Softwood to receive a stain finish shall be

- ★ Class CSH
- ★ Class 1
  species shall be as for softwood for a clear finish, with in addition – selected European Whitewood.

Softwood to receive a paint finish shall be not less than Class 2.

species shall be Western Hemlock, European Redwood or European Whitewood.

Beads and small sections shall be:

- ★ Class CSH
- ★ Class 1
  for all species

The minimum density for hardwood shall be 600kg/m^3

The minimum density for softwood shall be 450kg/m^3.

For exposed surfaces to receive a clear finish cutting out and making good of knots, resin pockets shall not be permitted.

Sapwood in Class 1 timber intended for clear finish shall be as for Class CSH.

Straightness of grain for glazed, panelled doors shall be not greater than 1 in 15.

Only isolated pinholes shall be permitted.

Laminating, finger jointing and edge jointing shall not be permitted in joinery intended for clear finish.

C3.2 Additional requirements for timber in fire-resisting doorsets

Straightness of grain for glazed, panelled leaves and framing of flush door leaves shall not be greater than 1 in 15.

The rate of growth shall not be less than 6 rings in 25mm.

Wane shall not be permitted, even in concealed positions.

Marked changes between sapwood and heartwood shall not be permitted.

Defects, including splits, shakes and checks, unsound knots and resin pockets shall not be permitted. Where cut out and filled in accordance with clause 19 of BS1186 Part 1, fillers shall be of non-organic material.

Glazing beads without intumescent coatings, shall be of minimum density – 530kg/m^3 for 30 min. doorsets and 700kg/$m^3$for 60 min. doorsets.

★Intumescent coatings on glazing beads shall not be permitted.

C3.3 Hardboard facings for painted doors

shall be to BS1142: Part 2

★ type .....

★ surface finish .....

BS1142: Part 2 defines three types:

TE tempered
TN tempered
S standard

Type TE is rather stronger and more resistant to the effects of water and humidity than type TN. Standard hardboard is suitable for general interior use.

C3.4 Wood veneer for door facings:

★ species .....

★ stock no .....

★ manufacturer .....

Use only where the wood veneer is to be applied by the joinery contractor. Otherwise specify as part of the board, sheet or component (see **2.5** – Surface treatment and finishes).

C3.5 Plywood facings:

shall be to section 5 of BS1186 part 1.

★ bonding .....

★ source and grade .....

★ face ply species .....

★ treatment .....

For general information on plywood see:

- General guidance notes on specification of plywood (NBS)
- BS3493, 'Information about plywood'
- 'Building boards and slabs', Architects Journal 27.8.75.
- Finnish Plywood Development Association Data sheets.

Bonding:
Adhesives for plywoods are classified by performance in BS1203 – WBP, BR, MR or INT. Plywood used externally should have WBP adhesive and marine plywoods to BS1088 or 4079 should be considered.

Source and grade:
General guidance notes. Complete the sub-item by inserting the country of origin, standard and grade, giving the contractor a degree of choice if possible, eg:
'Canada, G/IS or MDO,
or Finland, S/BB,
or United Kingdom, BS1455, 2/3'.

Face ply species:
Use this sub-item for clear finished plywood.Select a species which is known to be readily available. Delete this sub-item if plywood is to be painted.
Plywood for painting shall be close grained or filled.

Treatment:
For information see TRADA Wood Information, section 2/3, sheet 11, 'Specification and treatment of exterior plywood'. Use this sub-item for pre-treated plywood. If not pre-treated, delete the sub-item and specify treatment in schedule under 'Boards/sheets'.

C3.6 Plastic laminate facings

shall be to BS 3794 at least 1.3mm thick

★ thickness .....

★ surface finish .....

★ manufacturer .....

C3.7 Pvc sheet and facings:

- type – high impact industrial grade
- finish – satin
- thickness – 1mm (miminum)

★ manufacturer .....

C3.8 Particle board shall be to BS5669

★ type(s) .....

★ density .....

Cores of CDB certified fire-resisting density doorsets are:

- 30 min. fire-resisting doorsets:
  - type – flaxboard
  - thickness – 36mm
  - density – 350 kg/m^3 minimum
- 60 min. fire-resisting doorsets:
  - type – wood chipboard
  - thickness – 12 and 22 mm
  - density – 630 and 700 kg/m^3

  or
  - type – flaxboard
  - thickness – 46mm
  - density – 475 kg/m^3 minimum

C3.9Buffer strips shall be 12 x 2mm expanded pvc or neoprene

★ colour .....

★ manufacturer .....

White, brown or black may be specified.

C3.10 Glass in panels shall comply with BS6262 as follows

- medium and heavy duty grades:
  6mm toughened or laminated safety glass
- fire-resisting grades:
  6mm georgian wired clear glass.

C4 Accessories, fastenings, adhesives, sealants

C4.1 Profiles, cover strips:

★ material .....
★ finish .....
★ manufacturer .....

BS 3835 specifies rigid pvc profiles, but does not cover the full range of sections available.

C4.2 Fastenings:

- nails shall be to BS1202
- screws shall be to BS1210
- plugs shall be either:
  - hardwood blocks or battens for casting in, or
  - traditional hardwood plugs, shaped to twist and grip when driven, or
  - proprietary fibre or plastics plugs or other approved type.

For guidance on the specification of nails, wood screws, bolts, screws, nuts, and washers, see NBS

Where there are several fastenings for different components or for fixing to different materials the purpose of each one can be made clear in the clauses, eg:
'Wood screws to BS1210:
- for fixing door linings to plugs in concrete – steel with an anti-corrosive finish
- for fixing external doors and windows – non-ferrous types.'

Location of fastenings should be shown on drawings wherever possible, together with any special requirements on type, diameter, gauge, length, etc.

C4.3 Adhesives

★ adhesive for ..... shall be to BS1204, type WBP
★ adhesive for ..... shall be to BS1204, type MR or PVA emulsion type to BS4071
★ adhesive for ..... manufacturer .....

Type WBP is suitable for external joinery and internal joinery where high humidity may occur, eg in laundries or changing rooms.

Types MR or PVA emulsion are suitable for internal joinery in normal environmental conditions.

Use the third clause for particular situations where a special proprietary adhesive is required.

C5 Workmanship

Workmanship shall be to BS1186 Part 2 and as amplified as follows:

C5.1 Control samples

After finalisation of all details, prepare one of each of the following, as part of the quantity required for the project, incorporate into the finished work and obtain approval of appearance before proceeding with manufacture of the remaining quantity:

★ .....
★ .....

If prototypes are needed it is advisable to have them made up before going to tender on the components in question. Any alterations to the design or construction can be incorporated beforehand, thereby reducing the possibility of variations.

C5.2 Moisture content for internal purpose made joinery shall be

★ ..... % ±2% at time of delivery to site.

During delivery, storage, fixing and thereafter to practical completion maintain conditions of temperature and humidity to suit the specified moisture content.

See BS1186 Part 1.
Insert one of the following figures:
- 15% – for buildings with intermittent heating
- 12% – for buildings with continuous heating providing room temperatures in the range 12-18°C
- 10% – for buildings with continuous heating providing room temperatures in the range 20-24°C.

Higher figures may be appropriate for building types and spaces in which high humidity is to be expected.

C6 Machining and assembling

C6.1 Quality of work

- make doorsets as specified and to BS1186: Part 2
- form sections out of the solid when not specified otherwise. Carefully machine timber to accurate lengths and profiles, free from twist and bowing
- after machining, surfaces to be smooth and free from tearing, woolliness, chip bruising and other machining defects
- assemble with tight, close fitting joints, to produce rigid components free from distortion and within specified tolerances.

Planed surfaces can be marred by defects which result from faulty adjustment of planing machines and cutters not maintained in a sharp condition. The most common defects are those referred to in the clause. For further information see PRL Technical Note No. 5.

C6.2 Dimensions of timber cross-sections on details are finished sizes. variation from the stated sizes will not be permitted.

SMM 6, N1.2 states:
'All sizes shall be deemed to be basic (nominal) sizes unless stated as finished sizes. Limits on planing margins shall be given.

C7 Installation

C7.1 Fixing

Position components accurately, plumb, level and aligned as necessary. Fix to manufacturer's recommendations or as specified, to prevent pulling away and other movement during use and ensuring compliance with design and performance requirements.

At each fixing point, provide packing piecxes of wrot softwood, hardboard or plywood 90 x 90 and ensure adequate background fixing material for screws of specified length and gauge (fixing positions are shown in 5.4).

Do not fix doorsets until rooms are weathertight and the work of wet trades is finished and dried out.

Do not distort components when driving wedges or other packing, or when tightening fixings.

Do not cut, plane or sand components to remedy distortions.

Secure architraves and doorstops with lost head panel pins and stop.

Ensure adequate clearances for opening parts. If necessary, adjust packing and fixings to eliminate binding.

Fixing centres should be shown on drawings.

C7.2 Fire-resisting frames

The gap between frames to fire-resisting doorsets and walls shall be completely filled with

★ .....
★ Intumsecent material
★ Plaster
★ Mineral wool packing

Where a doorset is installed, there is often a gap of up to 12mm between the back of the frame and the wall. This gap may be covered with architraves which, if they are closely fitting, may meet the needs up to 30 min. fire resistance. If the fit of the architrave cannot be guaranteed some form of seal will have to be used to fill the gap. This can be plaster, well packed mineral wool, or an intumescent mastic. If architraves are not to be fitted, then intumescent mastic or plaster is essential. Even with closely fitting architraves, sealing will be necessary for 60 mins. doorsets.

C8 Fixings

C8.1 Nailing – punch nail heads below surface of timber which will be visible in the completed work.

C8.2 Screwing to timber:

- all screws to have clearance holes. Screws 3mm diameter or more and all screws into hardwood to have pilot holes
- countersink screw heads not less than 2mm below timber surfaces which will be visible in completed work.

C8.3 Pelleting – countersink screw heads 6mm below timber surfaces which are to be clear finished.

Glue in grain matched pellets not less than 6mm thick and cut from matching timber. Finish off flush with face.

★ hardwood pellets .....
★ plastic pellets .....

The method of fixing should be stated on the drawings if anything other than nailing is required, eg 'screwed', 'plugged and screwed', 'screwed and pelleted', 'plugged, screwed and pelleted'.

In these clauses it is assumed that:

- for painted finishes, screw holes in timber will be stopped
- for clear finishes, all screw holes will be pelleted.

C9 Sundry work

C9.1 Hanging doors – do not plane or sand pre-finished doors to adjust clearances.

C9.2 Ironmongery – assemble and fix carefully and accurately using fastenings with matching finish supplied by ironmongery manufacturer. Prevent damage to ironmongery and adjacent surfaces. At completion check, adjust and lubricate as necessary to ensure correct functioning.

Prevent damage to ironmongery and adjacent surface of doorsets. At completion check, adjust and lubricate as necessary to ensure correct functioning.

D Methods of test

Introduction

The following tests have been used for MDB and CDB doorsets for nearly 20 years.

BS DD171 1987 includes similar tests. It is suggested that the tests in Appendix D continue to be used until DD171 becomes a British Standard or a European Standard for doors comes into use.

Methods of test

Test 1: Twist

Remove the door leaf from its frame and stand it vertically upright: temporary supports must not exert any stress on the door during the test.

Against one face of the door establish two vertical reference lines or planes, one to intersect a corner on the hinge side of the leaf, the other to intersect a corner on the lock side.

Measure the distance of the two corners of the door from the vertical references.

Express the measured deviation as the sum of the distances measured at diagonally opposite corners and as the difference of distances measured at adjacent corners.

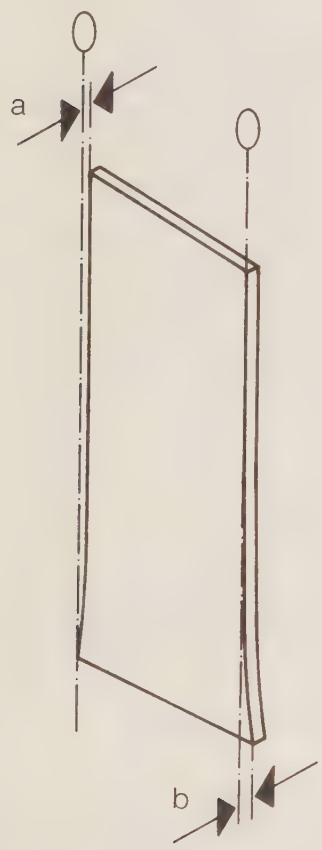

Measured at diagonally opposite corners
Deviation = a + b

Measured at adjacent corners
Deviation = c – d

Test 2: Surface flatness

The door leaf may be measured in its frame or laid flat on a horizontal surface.

Use a feeler gauge and two steel straight edges, one 50mm long and one 200mm long.

Place a straight edge at random against the face of the door and measure the distance between them.

Test both sides of the door: the straight edges may be placed in any position.

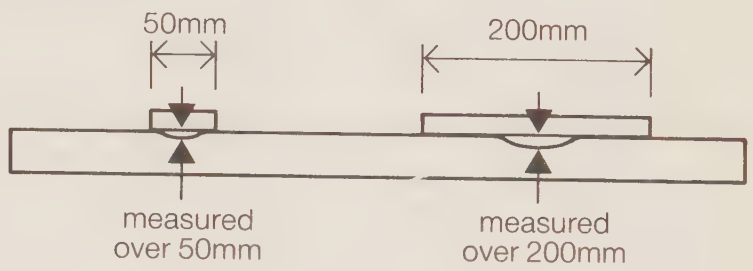

Test 3: Squareness

Use a steel square with arms not less than 500mm long.

Apply the square to each corner and measure the maximum distance between the door edge and the steel square in the positions shown in the diagram.

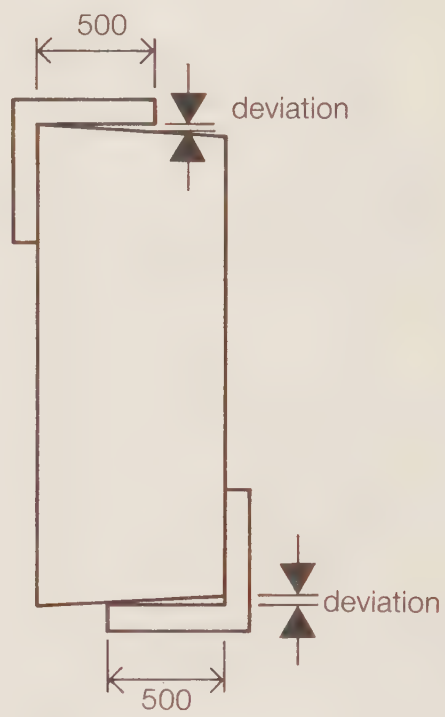

Test 4: Cup and bow

Remove the door leaf from its frame and stand it vertically upright: temporary supports must not exert any stress on the door during the test.

Use a feeler gauge and a steel straight edge of length not less than the door edge to be measured.

Place the straight edge on the face of the door, parallel to one edge and 10mm from that edge.

Measure the maximum distance between the straight edge and the face of the door.

Repeat for all other edges on that face and repeat for the other face of the door.

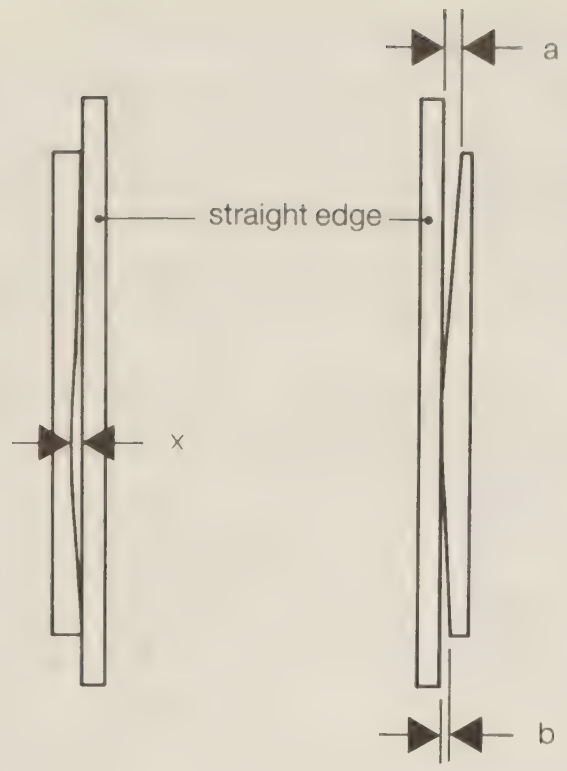

x = maximum cup $\frac{a+b}{2}$ = maximum bow

Test 5: Torsion resistance

Place the doorset in a rigid rig and fix it in a position in accordance with the manufacturer's instructions.

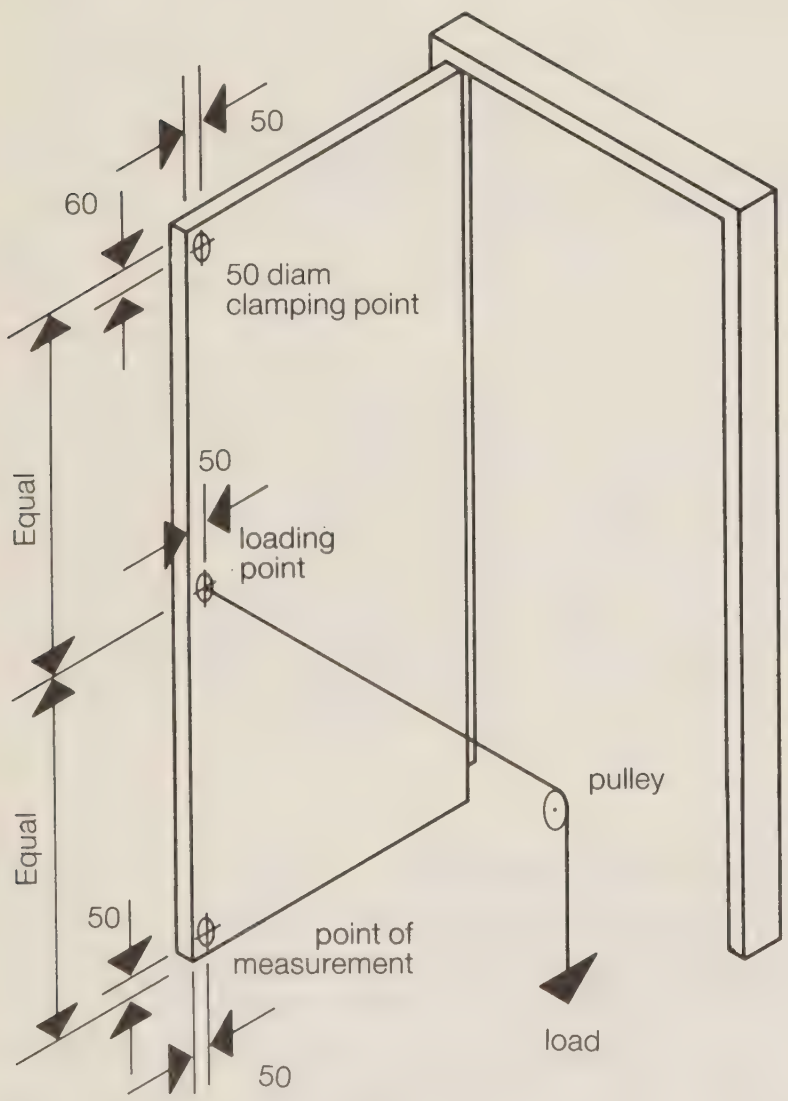

Open the door through 90 degrees and secure by clamping at the point shown in the diagram.

Use a dial gauge to measure deflection at the point of measurement shown in the diagram.

Apply test loads by attaching a cord to the handle: if the doorset has no handle apply loads to a clamp attached to the door in the position shown in the diagram.

Allow the test specimen to stabilize during 5 minutes in which no movement is recorded by the gauge. Take an initial reading with no applied load. Apply a force of 100N, allow the specimen to stabilize and record the deflection measured by the gauge. Repeat the process, applying further load in increments of 100N until the maximum test load is reached (400N). Record the maximum deflection.

Reverse the process, removing load in increments of 100N, until all load is removed.

Allow the specimen to stabilize for an hour. Record the residual deflection.

Remove the clamps and close the door. Confirm that the doorset functions normally.

Test 6: Hard body impact resistance

Remove the door leaf from its frame and lay it horizontally with the top and two long edges supported on softwood bearers 15mm wide to simulate the door stops in a single swing doorset.

Select one face of the door and mark out the bottom half as shown in the diagram.

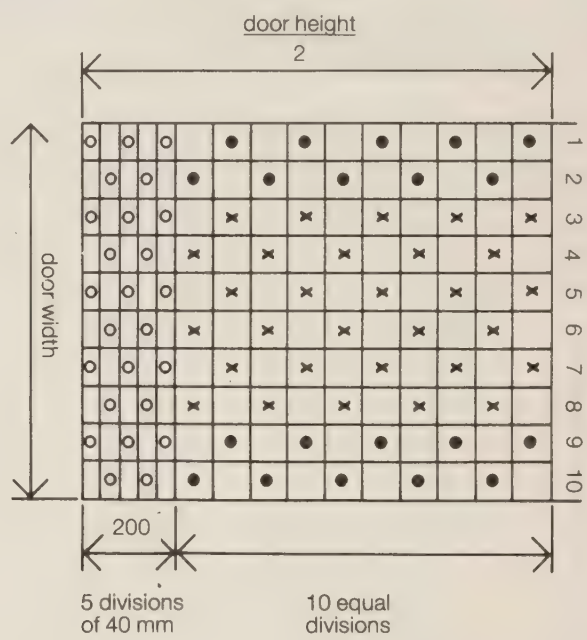

Test equipment consists of a solid stall ball 50mm diameter and a tube with an internal diameter which will allow the ball to pass freely. Determine the length of the tube by the formula:

$$l = \frac{TF}{9.8 \times W}$$

Where: l= length of tube
TF= test force specified
W= weight of ball in kg

Select 8 target points from those marked with an x on the diagram. Select 3 target points from those marked with an ○ on the diagram. Select 2 target points on each stile from those marked ● on the diagram.

Do not test squares which adjoin one another.

Place the tube vertically with one end on the door at the centre of the selected target area; place the steel ball in the top of the tube and let it fall freely onto the target area.

At each impact point measure the depth of indentation and the area of cracks in the door surface.

Impact failure is defined as an indent greater than 0.6mm or an area of surface cracks exceeding 15mm diameter.

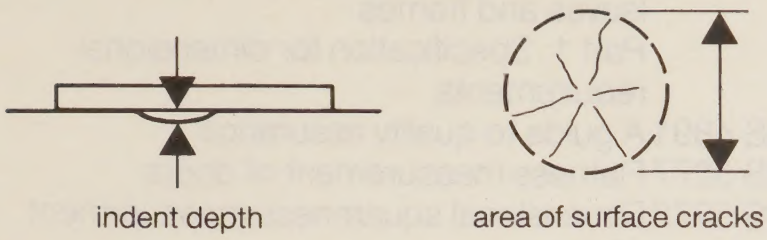

Test 7: Heavy body impact resistance

Place the doorset in a rigid rig and fix it in position in accordance with the manufacturer's instructions.

Secure the door(s) in the closed position using the ironmongery fitted to the doorset. If the doorset has no securing ironmongery secure the door(s) closed with temporary devices.

Test equipment consists of a bag 250mm in diameter and 600mm long, filled with dry sand so that the total mass is 30kg, and suspended on a cord so that the bag just touches the surface of the door.

The test consists of lifting the bag through a specific height and allowing it to swing freely so as to strike the door at a target point.

Apply the test three times within a period of three minutes to one side of the door: re-position the equipment and apply the test three times to the other side of the door.

Following the test on each side, confirm that the doorset functions normally.

When testing double swing doors the target point will be the centre point of each door face. When testing single swing doors the target point will be the centre point of the door face on the side in contact with the door stops and, on the other, a point at mid height of the door and as close as possible to the lock stile.

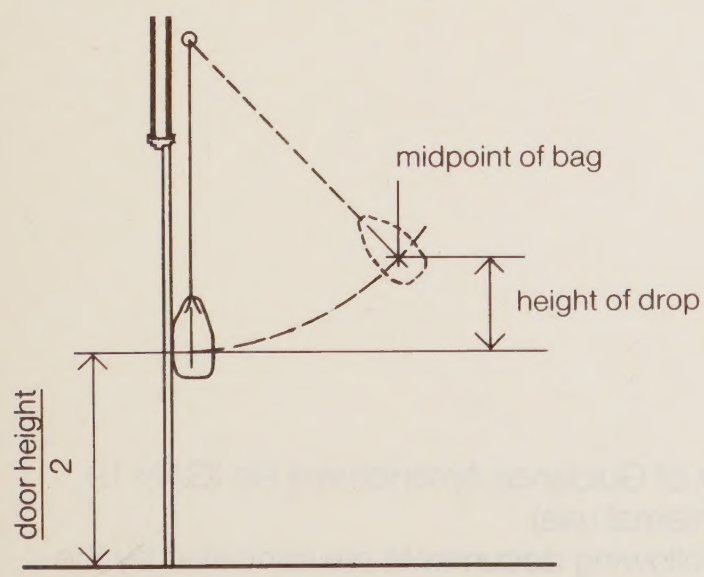

Determine the height of drop by the formula:

$$h = \frac{TF}{9.8 \times W}$$

where h = height of drop
TF = Test force specified
W = Weight of sand bag (30kg)

Test 8: Slamming

The door leaf shall be 826 x 2060 mm, and the weight shall be approximately 60 kg (symmetrically distributed about the plane of the door). The door leaf shall be hung on suitable hinges and without a door closer or other restricting device.

A light strong line shall connect the door leaf at mid height and 50mm from the closing edge to a 15kg weight. The line shall run horizontally from the door, approximately perpendicular to the plane of the door opening, and over a pully to a weight. The appararus shall be arranged so that the descending weight strikes a platform and removes tension from the line when the door leaf is within 20mm of closing.

The door leaf shall be opened 60° and released to be slammed shut by the action of the falling weight.

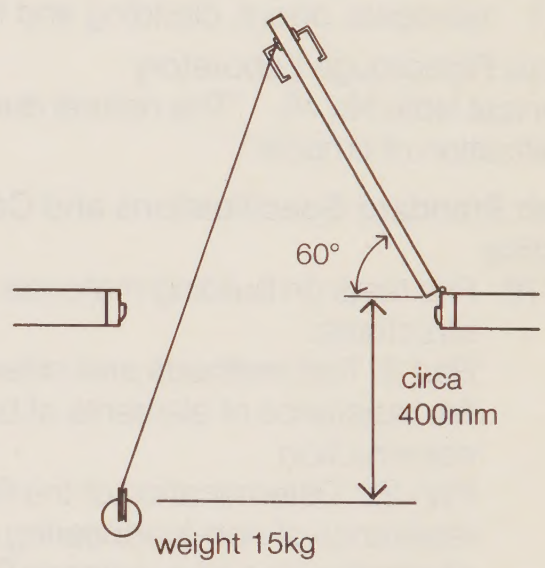

Test 9: Resistance to abuse

Please the doorset in a rigid rig and fix it in position in accordance with the manufacturer's instructions.

Test equipment consists of a block of oak 50mm x 10mm in cross section 50mm long.

Open the door and place the block between frame and leaf as shown in the diagram and at mid-height of the door.

At the handle position apply a progressively increasing force up to a maximum of 200N.

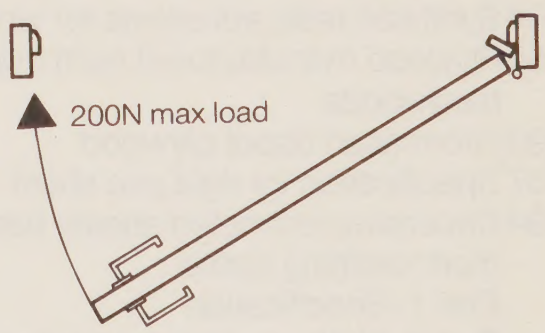

Test 10: Resistance to marking

When tested in accordance with BS3962: Part 2 to 6 inclusive the surface treatment of doorsets should meet resistance rating 3.

References

Other DoH data
Health Technical Memoranda:
HTM81 Fire safety in health buildings
Activity data
Ergonomic data
Health Building Notes:
HBN37 Access for wheelchairs
Health Design Notes

Statutory legislation
The Building Regulations

Other publications
Property Services Agency
Method of Building and Component Data Base
Performance Specification, Fourth Edition: June 1982
BRE Report: Timber selection by properties, the species for the job.
Part 1 windows, doors, cladding and flooring

Princes Risborough Laboratory
Technical Note No 40 "The natural durability classification of timbers"

British Standard Specifications and Codes of Practice
BS 476 Fire tests on building materials and structures:
Part 8: Test methods and criteria for the fire resistance of elements of building construction
Part 22: Determination of the fire resistance of non-loadbearing elements of construction (to supersede Part 8 when published)
Part 31: Methods of measuring smoke penetration through doorsets and shutter assemblies
Part 31: Section 31.1 Method of measurement under ambient temperature conditions
BS1142 Fibre building boards
Part 1: Methods of test
Part 2: Medium board and hardboard
BS 1186 Quality of timber and workmanship in joinery
Part 1: Quality of timber
Part 2: Quality of workmanship
BS 1204 Synthetic resin adhesives for wood
BS 1455 Plywood manufactured from tropical hardwoods
BS 3493 Information about plywood
BS 3757 Specification for rigid pvc sheet
BS 3794 Decorative laminated sheets based on thermosetting resins
Part 1: Specification
Part 2: Method of determination of properties
BS 3962 Methods of test for finishes for wooden furniture
BS 4322 Recommendations for buffering on hospital vehicles such as trolleys
BS 4330 Recommendations for the co-ordination of dimensions in building.
Controlling dimensions
BS 4787 Internal and external wood doorsets, door leaves and frames
Part 1: Specification for dimensional requirements
BS 4891 A guide to quality assurance
BS 5277 Flatness measurement of doors
BS 5278 Dimensional squareness measurement of doors
BS 5369 Methods of testing door behaviour under humidity
BS 5669 Specification for wood chipboard and methods of test for particle board
BS 5750 Quality systems
BS 6150 Code of practice for painting of buildings
BS 6262 Code of practice for glazing for buildings
BS 6512 Guide to fire doors
DD171 Draft for Development Guide to specifying performance requirements for hinged or pivotted doors (including test methods).

Trade Associations
The Guild of Architectural Ironmongers: Code of Practice No. 1
The Association of British Hardware Manufacturers:
Code of Practice for hardware essential to the optimum performance of fire resisting timber doorsets.

Index of Guidance Amendment No IGAN 19 (for internal use)
The following documents are cancelled by the contents of this document:
MDB 6.1 to 6.6
CDB Mark 3 doorsets

Printed in the United Kingdom for Her Majesty's Stationery Office
Dd290280 11/89 C40 G3390 10170

HMSO BOOKS

HMSO publications are available from:

HMSO Publications Centre
(Mail and telephone orders only)
PO Box 276, London, SW8 5DT
Telephone orders 01-873 9090
General enquiries 01-873 0011
(queuing system in operation for both numbers)

HMSO Bookshops
49 High Holborn, London, WC1V 6HB 01-873 0011 (Counter service only)
258 Broad Street, Birmingham, B1 2HE 021-643 3740
Southey House, 33 Wine Street, Bristol, BS1 2BQ (0272) 264306
9–21 Princess Street, Manchester, M60 8AS 061-834 7201
80 Chichester Street, Belfast, BT1 4JY (0232) 238451
71 Lothian Road, Edinburgh, EH3 9AZ 031-228 4181

HMSO's Accredited Agents
(see Yellow Pages)

and through good booksellers

£4.30 net

ISBN 0 11 321260 7